Del 1

Oppgave	Maks poeng	Oppgavetype
ℹ		Dokument
1	5	Tekstfelt
2	5	Tekstfelt
3	5	Tekstfelt
4	5	Tekstfelt
5	10	Tekstfelt
6	10	Tekstfelt
7	10	Tekstfelt

Del 2

Oppgave	Maks poeng	Oppgavetype
8	2.5	Sammensatt
9	2	Flervalg (flere svar)

Del 3

Oppgave	Maks poeng	Oppgavetype
10	7.5	Fyll inn tall
11	6	Flervalg (flere svar)

Del 4

Oppgave	Maks poeng	Oppgavetype
12	4	Flervalg
13	3	Flervalg
14	4	Flervalg
15	6	Flervalg

16	8	Flervalg
17	7	Flervalg

Eksamen IN1080 - Mekatronikk
Eksamensdag: 27. mai kl 14:30
Tid for eksamen: 4 timer

Hjelpemidler: Alle trykte og skrevne hjelpemidler er tillatt. Kalkulator vil være tilgjengelig digitalt.

Om oppgavene

Oppgavesettet består av forskjellige typer oppgaver, både oppgaver der det forventes at du skriver svar og flervalgsoppgaver med ett eller flere riktige valg. Noen oppgaver har flere felter for besvarelse, og noen kan ha vedlegg som er vesentlige for å løse oppgaven. Pass derfor på å sjekke at du har lest og besvart hele oppgaven for hver oppgave, og benytt gjerne rullefeltene (scrollbar) til å kontrollere at du har fått med deg alt.

Flervalgsoppgaver med radioknapper kan endres, men ikke skrus av når du har valgt alternativ. Felt med avkrysningsbokser kan ha begrensning i antall kryss som er lov.

Om poeng i dette eksamenssettet

I dette oppgavesettet er det mulig å oppnå inntil 100 poeng totalt. Poengene for hver oppgave er oppgitt på oversiktssiden for å angi vektingen av hver oppgave slik at kandidatene kan disponere tiden. Feil i avkrysningsoppgaver kan gi poengtrekk innenfor oppgaven. Poengtrekk tas ikke med fra en oppgave til en annen. Nøyaktig tall på poeng for hver riktige eller gale avkrysning vil ikke oppgis da dette kan gi svar på hvor mange riktige oppgaven har.

Lykke til!

1

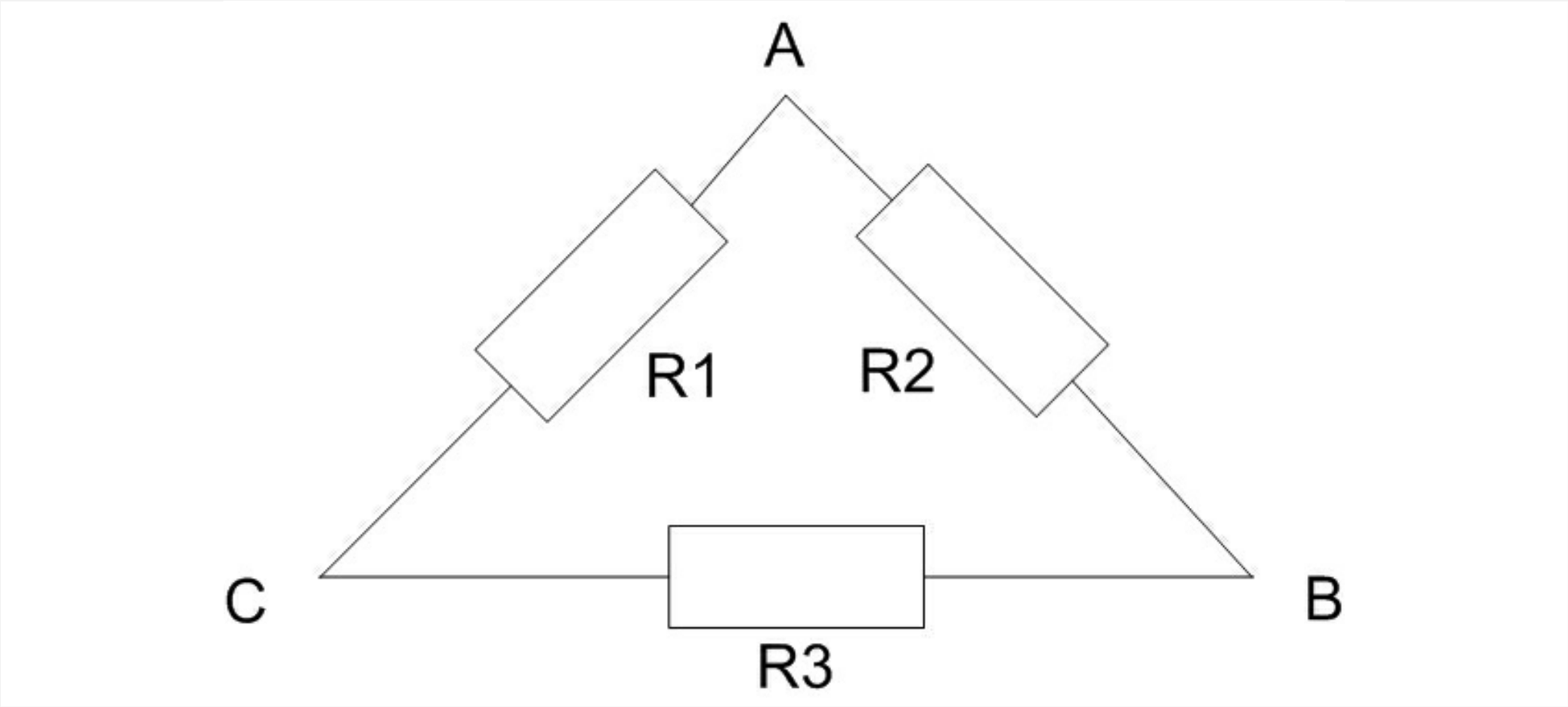

Gitt kretsen i figuren. Anta følgende komponentverdier: R1=30 kΩ, R2=50 kΩ og R3=20 kΩ. Beregn resistansen mellom nodene A og B, og mellom nodene A og C.

Skriv ditt svar her...

Maks poeng: 5

2

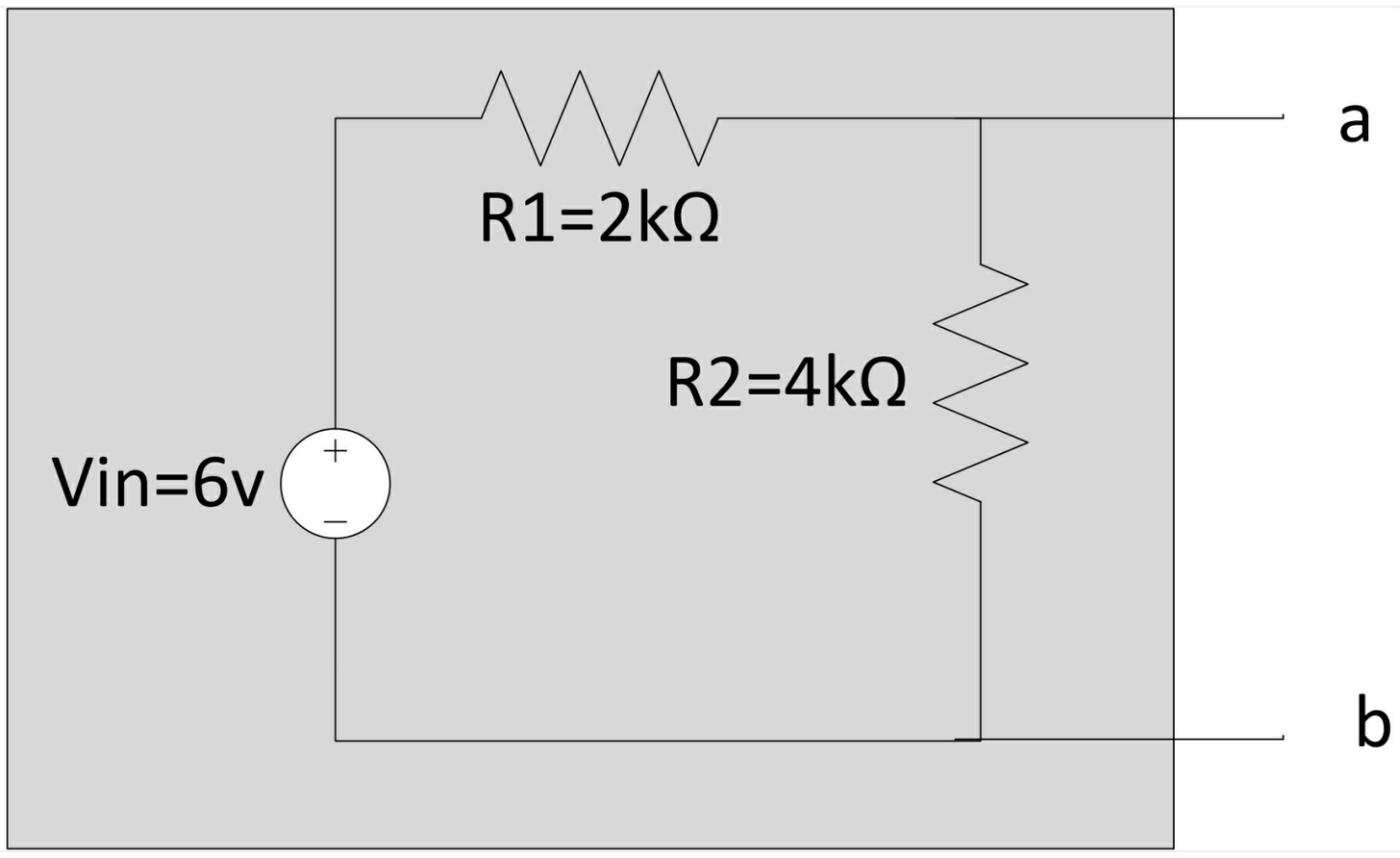

Gitt kretsen i figuren.

1. Hva er den Thévenin-ekvivalente resistansen Rth sett mellom node **a** og **b**?
2. Hva er den tilsvarende Thévenin-ekvivalente spenningen Vth ?

Skriv ditt svar her...

Maks poeng: 5

3

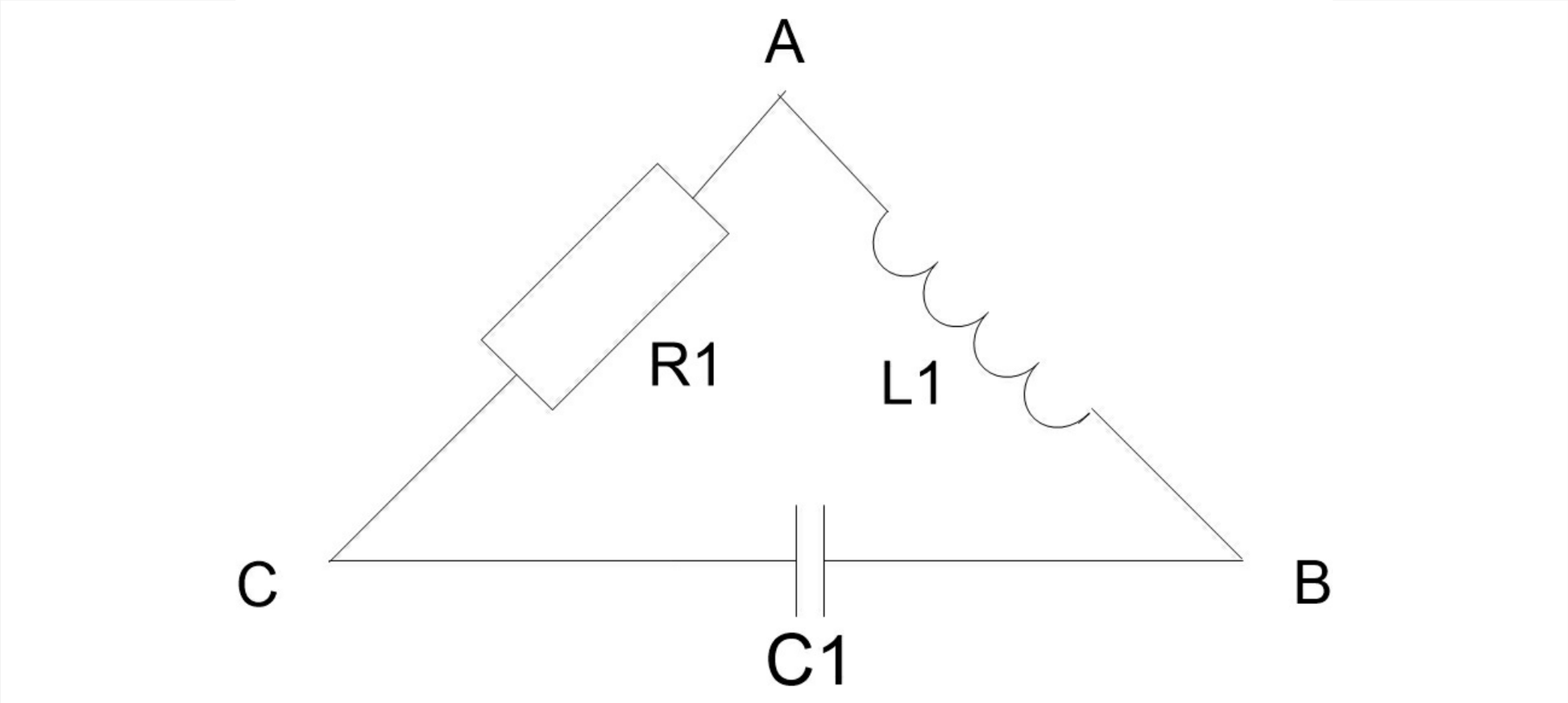

Gitt kretsen i figuren. Anta at alle komponentene er ideelle, og at R1, C1 og L1 kan ha vilkårlige verdier. Hva er den tilnærmede impedansen mellom node C og B i følgende to tilfeller:

1. Likestrøm (dc)?
2. Vekselstrøm (ac) ved svært høye frekvenser?

Skriv ditt svar her...

Maks poeng: 5

4

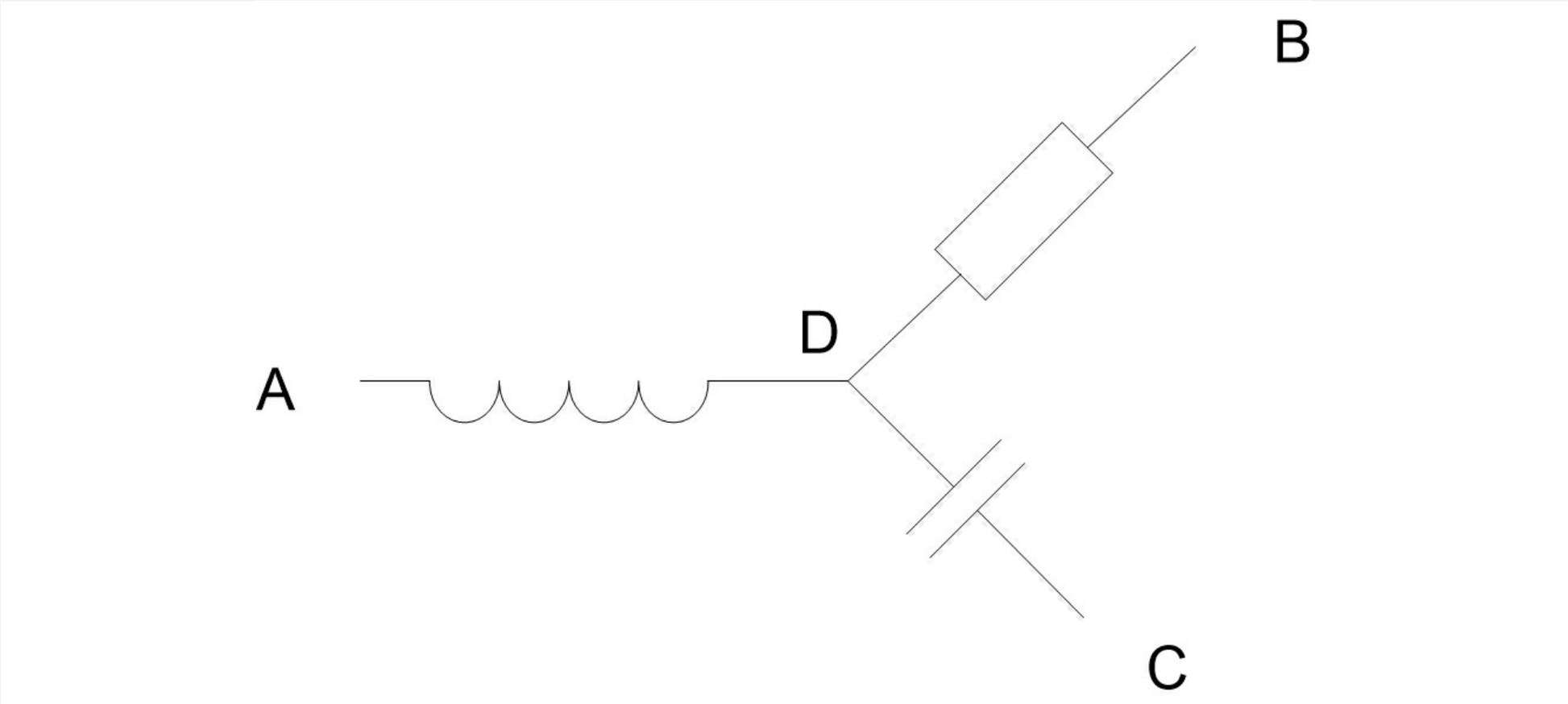

Gitt kretsen i figuren og anta at komponentene er ideelle. Tenk deg videre man kan kortslutte forbindelsen mellom noder (dvs. de kobles sammen med en leder perfekt leder). Hvilke typer impedans får vi i følgende tilfeller:

1. Mellom node A og B når forbindelsen mellom node A og C kortsluttes?
2. Mellom node C og D når forbindelsen mellom node A og C kortsluttes?

Skriv ditt svar her...

Maks poeng: 5

5

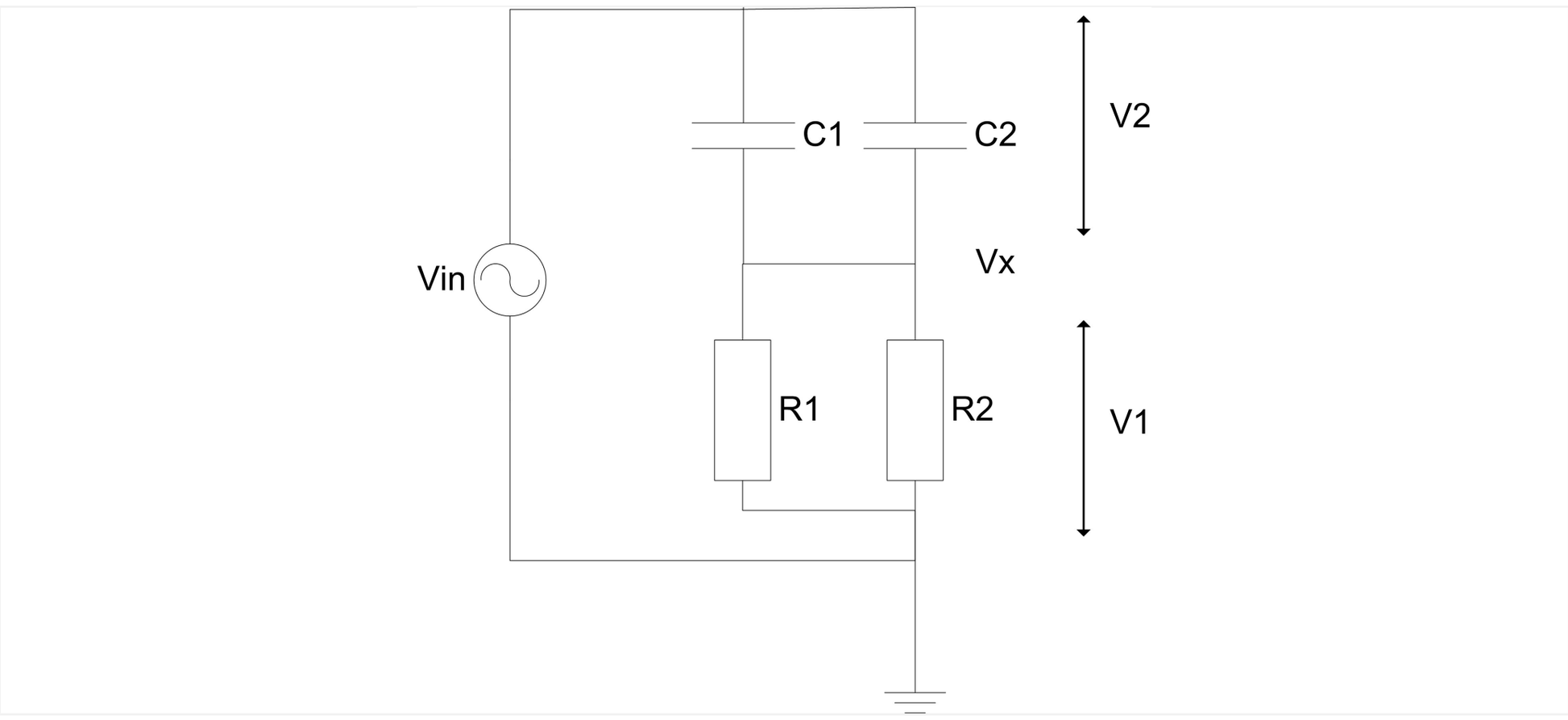

Gitt kretsen i figuren. Besvar følgende spørsmål:

1. Finn spenningen Vx uttrykt ved de andre spenningen i kretsen.
2. Anta at Vin er en likespenning større enn 0: Er da V1 eller V2 størst? Begrunn svaret.
3. Hva slags filter er denne kretsen hvis spenningen tas ut over resistorene (dvs Vout=V1)?
4. Hvor må spenningen tas ut hvis vi ønsker et lavpassfilter?

Skriv ditt svar her...

Maks poeng: 10

6

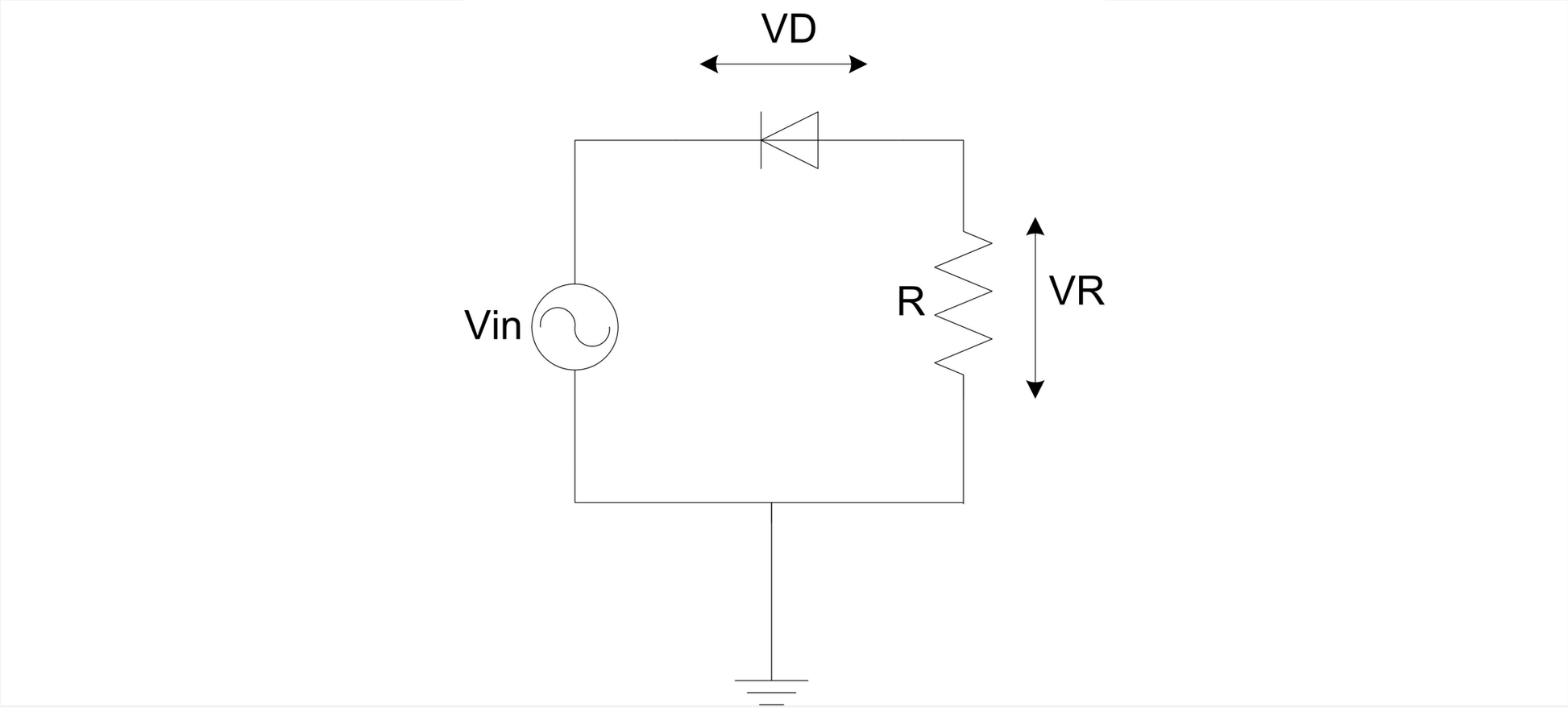

Gitt diodekretsen vist i figuren hvor VD er spenningen over dioden og VR spenningen over resistoren R. Anta at dioden er ideell med t barrierespenning Vf=0.6 volt, mens breakdown-spenningen er Vbr=-50 volt, og Vin = 5*sin(t).

1. Hva er det største spenningefallet målt i absoluttverdi (dvs enten postivt eller negativt) over resistoren R?
2. Hva er det største spenningefallet målt i absoluttverdi (dvs enten postivt eller negativt) over dioden?
3. Hva er VR når Vin = 5 volt?
4. Hva er VD når Vin=-5 volt?

Skriv ditt svar her...

Maks poeng: 10

7

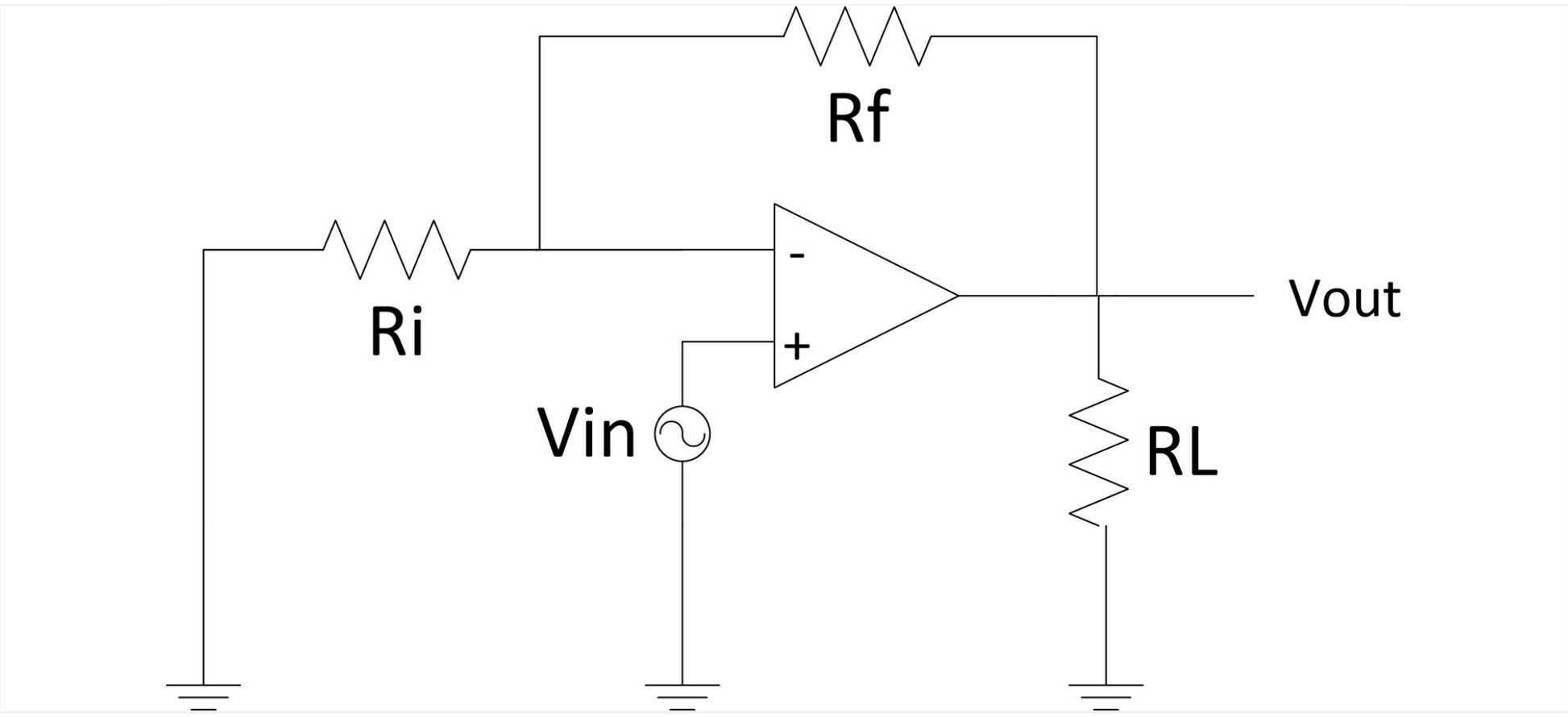

Gitt kretsen i figuren. Anta at opamp'en er ideell hvis ikke annet er angitt, og videre at Rf = 240 kΩ, RL= 25 kΩ og Vin = 1+sin(t) volt

1. Hva må Ri være for at kretsen skal gi en forsterkning A = 25?
2. Hva er den maksimale effekten lastmotstanden RL må tåle for det gitte input-signalet?
3. Hva slags krets får vi hvis Rf=0 og Ri= ∞?
4. Anta nå at opampen ikke lenger er ideell; blant annet er Rout ikke lenger lik 0. Hvordan vil dette påvirke hvor mye effekt RL må tåle?

Skriv ditt svar her...

Maks poeng: 10

8

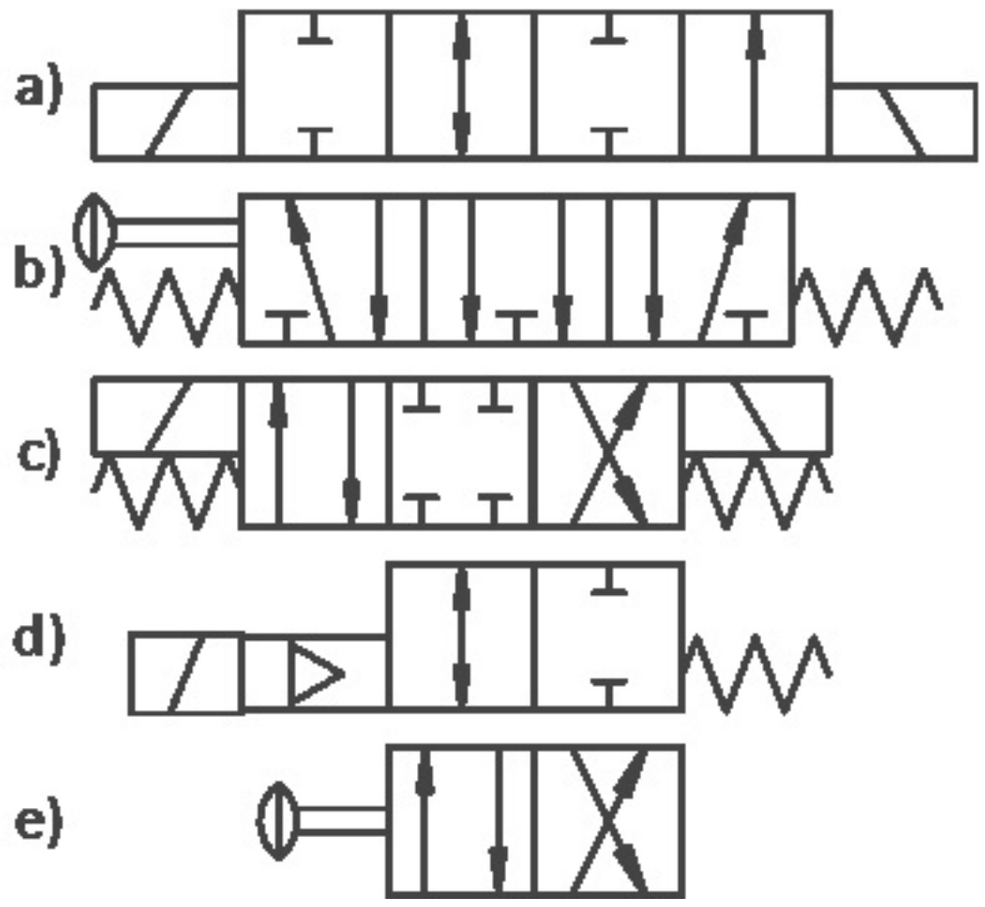

Hvilke av disse ventilene har ikke avklart startverdi?

Velg ett eller flere alternativer

- Ingen
- d)
- a) ✔
- e) ✔
- c)
- b)

Hvilke av ventilene er normalt (default) helt lukket?

Velg ett eller flere alternativer

- e)
- a)
- ingen
- c) ✔
- b)
- d) ✔

Hvilke av ventilene kan stilles manuelt?

Velg ett eller flere alternativer

- c)
- d)
- e) ✔
- b) ✔
- ingen
- a)

Pilotbaserte magnetventiler...

Velg ett eller flere alternativer

- ... er uavhengig av trykkforskjeller
- ... kan brukes i pneumatiske systemer ✔
- ... trenger større magneter enn andre magnetventiler
- ... er normalt avhengig av trykkforskjeller for å virke ✔
- ... brukes bare til hydraulikk
- ... er raskere enn andre magnetventiler
- ... brukes for å klare seg med mindre solenoider enn rene magnetventiler ✔
- ...er enklere mekanisk enn andre ventiler
- ... kan brukes i hydrauliske systemer ✔

Maks poeng: 2.5

9

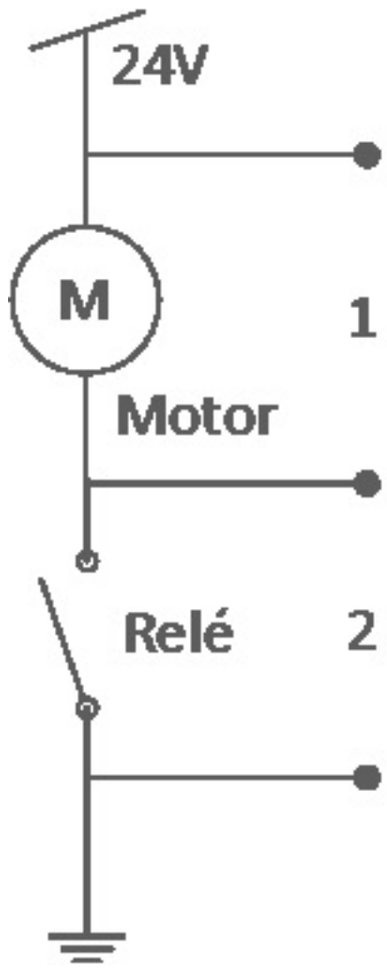

En DC-motor og et relé er koblet som vist på skjemaet over. Reléet brukes til å skru motoren av og på og er koblet til styringslogikk som vi ikke ser på skjemaet.

I det motoren skrus av høres en frese/knitrelyd til motoren stopper, og etterpå lukter det litt svidd. I denne oppgaven skal du sikre at denne kretsen blir trygg og kan fungere over lang tid.

På koblingsbrettet er det plass til én komponent i parallell med motoren (1), og én komponent i parallell med reléet (2). *I denne oppgaven fins det ikke andre koblingsmuligheter.*

Valgene for komponenter (og orientering) er følgende:

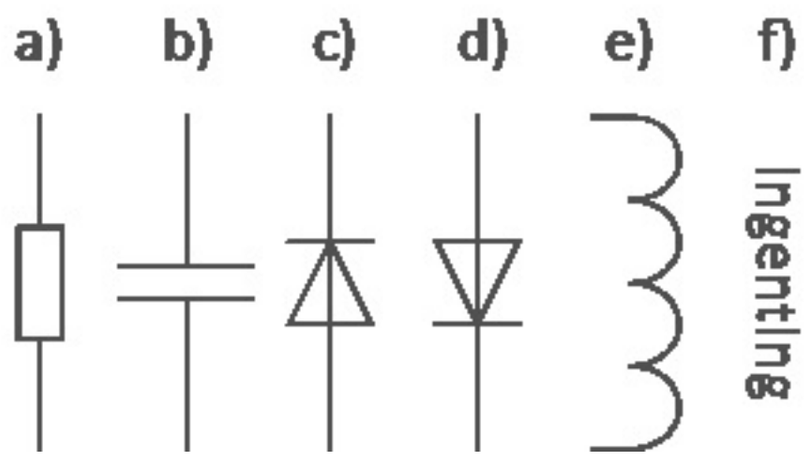

Velg hvilken komponent som bør brukes på plass 1.

- c) dioden som peker opp ✔
- e) spolen
- d) dioden som peker ned
- a) resistoren
- b) kondensatoren
- f) ingenting

Velg hvilken komponent som bør brukes på plass 2.

- f) ingenting ✔
- d) dioden som peker ned
- b) kondensatoren
- a) resistoren
- c) dioden som peker opp
- e) spolen

Maks poeng: 2

10

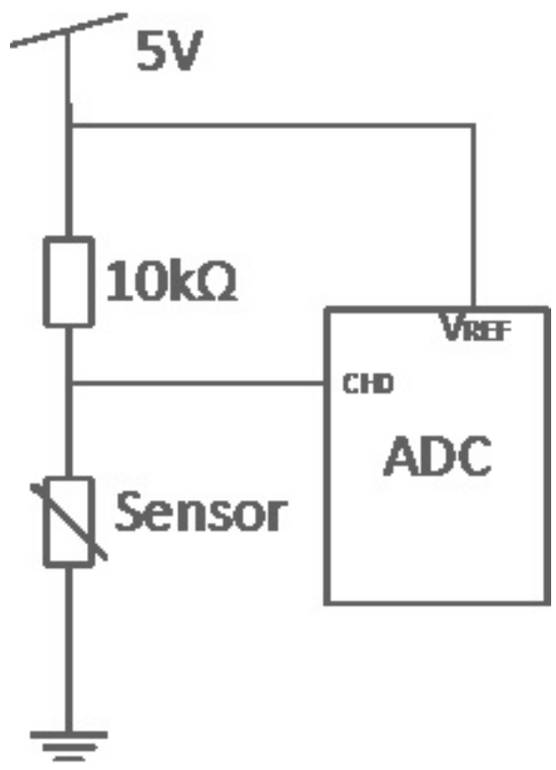

I et måleoppsett har vi en motstandsbasert sensor koblet i en spenningsdeler og en analog til digital konverter (ADC) som vist på skjemaet over. Sensoren har en motstand som kan variere fra 5kΩ til 20kΩ. Uten ytre påvirkning har sensoren en motstand på 10kΩ.AD-konverteren er av typen LTC1098 (Se [forkortet] datablad). Forsyningsspenningen til AD-konverteren er 5V , og AD-konverteren er koblet videre til et kontrollsystem som lar oss lese av verdiene den måler (vises ikke på skjema).

Vi tar som utgangspunkt for oppgaven at AD vil gi 0 som digital output for 0 volt på CH0, og maksimal digital verdi for samme spenning som VREF på CH0.

Alle tallsvar i denne oppgaven skal oppgis med titallssystem/ desimaltall.

Hva er den laveste digitale AD-verdien vi kan lese av med dette oppsettet?

a) (84 - 87)

Hva er den høyeste digitale AD-verdien vi kan lese av med dette oppsettet?

b) (169 - 172)

Ved hvilket frekvensområde kan vi bruke denne AD-konverteren uten å få aliasing?

c) Fra (0)kHz

d) til (16 - 16,5)kHz

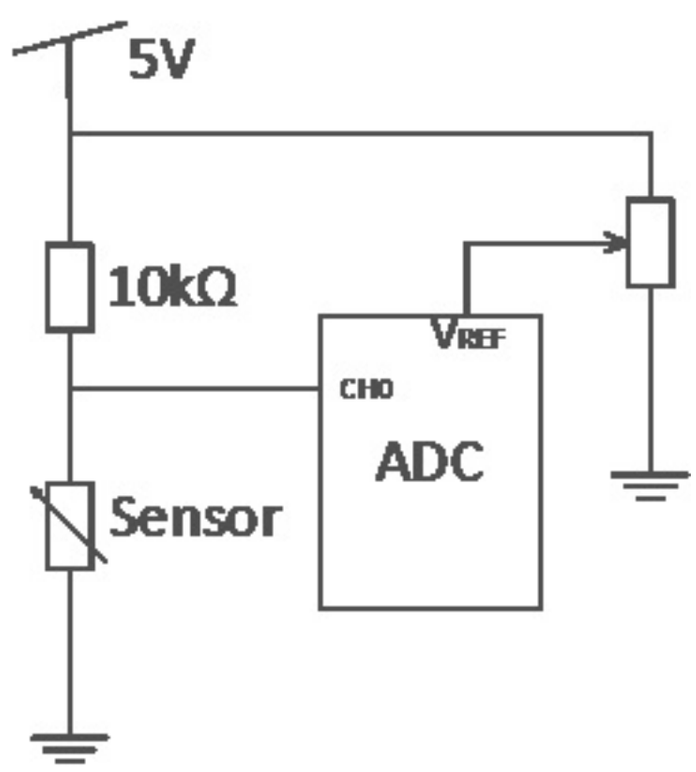

Ved å koble et potensiometer til Vref som vist på figuren over, kan vi bestemme måleområdet til AD-konverteren.

Hvilken verdi bør spenningsreferansen (VREF) ha for at vi skal få utnyttet det dynamiske området til sensor og ADC så mye som mulig? (oppgi svar med 0,1V presisjon eller 2 siffer)

e) (3,3 - 3,34)V

Vi lar sensoren være upåvirket, og bruker de digitale verdiene til AD-konverteren til å hjelpe oss mens vi justerer potensiometeret.

Hvilken verdi bør AD-konverteren vise når vi har optimal spenningsreferanse (VREF)?

f) (190 - 195)

Maks poeng: 7.5

11

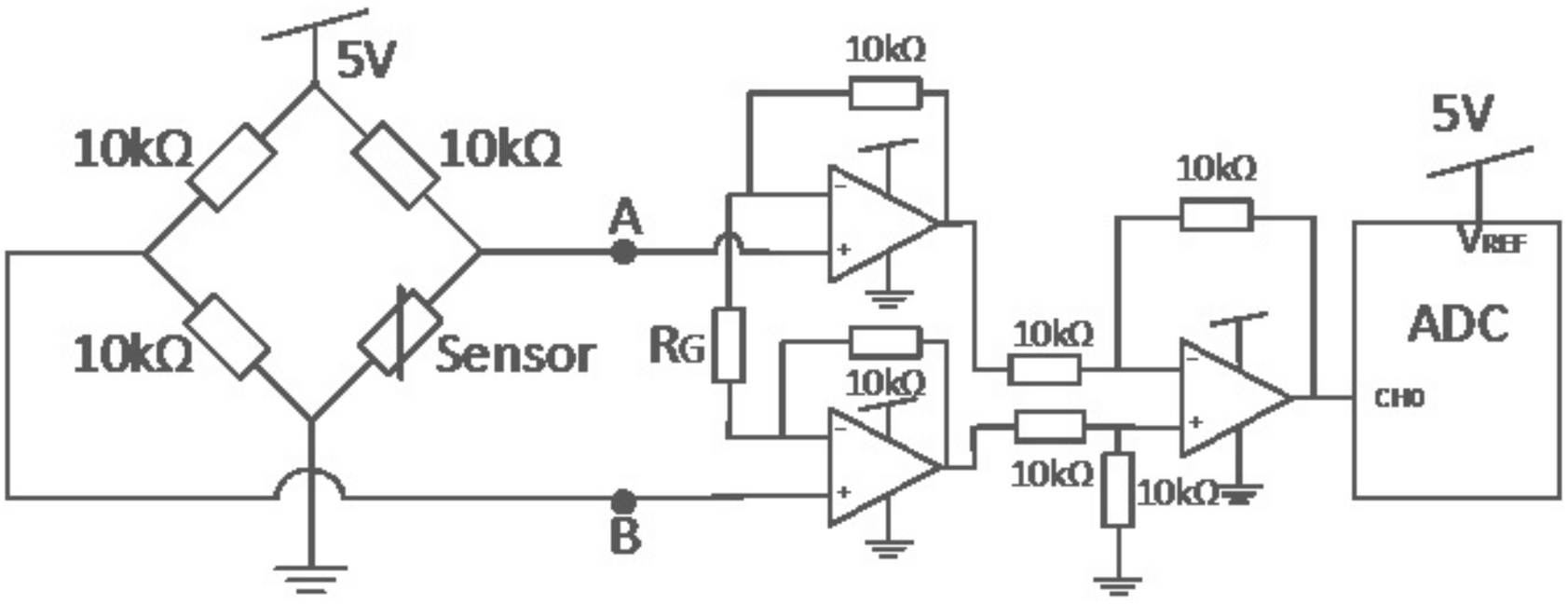

I et måleoppsett har vi en motstandsbasert sensor koblet i en wheatstone bru som er koblet til en instrumenteringsforsterker som går til en analog til digital konverter (ADC) som vist på skjemaet over. Sensoren har en motstand som kan variere fra 5kΩ til 20kΩ. Uten ytre påvirkning har sensoren en motstand på 10kΩ. AD-konverteren er av typen LTC1098 (Se datablad). AD-konverteren er koblet videre til et kontrollsystem som lar oss lese av verdiene den måler (vises ikke på skjema).

a) Hva er maksimal og minimal verdi for spenningsforskjell i A (Amax-Amin) og B (Bmax - Bmin)

Velg ett alternativ

- A: 3,00V, B: -3,00V
- A: 0,83V, B: 0,83V
- A: 1,67V, B: 0V ✔
- A: 2,00V, B: 1,00V
- A: 0,83V, B: 0V

b) I denne oppgaven har vi en wheatstone bru istedenfor en enkel spenningsdeler (forrige oppgave). Under står det noen påstander. Kryss av for de som er sanne

Velg ett eller flere alternativer

- Vi må ha en instrumenteringsforsterker for å kunne bruke en wheatstone bru.
- Vi får (minst) like stort dynamisk område med en wheatstone-bru som med en spenningsdeler. ✔
- En instrumenteringsforsterker er bra fordi den har lav inngangsimpedans.
- Vi får alltid et mindre dynamisk område med wheatstone-bru enn bare én spenningsdeler, men det veies opp med bedre støyegenskaper for målekretsen totalt.
- Wheatstone-bru med differensiell forsterkning gir bedre signal-støyforhold enn bare en spenningsdeler når utslaget er lite i forhold til støyen. ✔
- Hvis vi kun bruker én differensiell opamp som forsterker vil forsterkerleddet forstyrre avlesningen mer enn med en instrumenteringsforsterker. ✔

c) Hvilken verdi for RG må vi ha for å utnytte det dynamiske området til AD-konverteren maksimalt?

IN1080-V19

Velg ett alternativ

- 20kΩ
- 30kΩ
- 36kΩ
- 10kΩ ✔
- 33kΩ

Maks poeng: 6

12 For inngangsspenningen $v_{inn}(t) = \cos(\omega t)$, hva blir utgangsspenningen $v_{ut}(t)$?

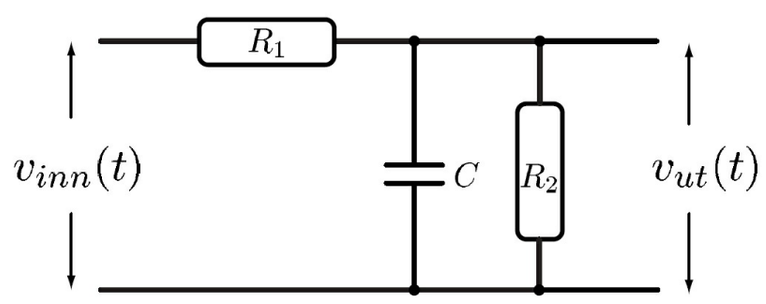

Velg ett svar

- $v_{ut}(t) = \frac{R_2}{R_1+R_2+R_1R_2\omega C} \cdot \cos(\omega t + \phi)$
- $v_{ut}(t) = \frac{R_2}{\sqrt{(R_1+R_2)^2+(R_1R_2\omega C)^2}} \cdot \cos(\omega t + \phi)$ ✔
- $v_{ut}(t) = \frac{R_2}{R_1+R_2+R_1R_2\omega C} \cdot \sin(\omega t + \phi)$
- $v_{ut}(t) = \frac{R_2\omega C}{\sqrt{(R_1+R_2)^2+(R_1R_2\omega C)^2}} \cdot \cos(\omega t + \phi)$
- $v_{ut}(t) = \frac{R_2}{\sqrt{(R_1+R_2)^2+(R_1R_2\omega C)^2}} \cdot e^{j\omega t}$

Maks poeng: 4

13 Vi har en bipolar steppermotor med 2 spoler A og B. Vi tenker oss et arrangement der vi styrer spenningene over spolene fra vår Arduino mikrokontroller. Vi tenker oss at "pinA1" og "pinA2" direkte setter spenningene over spole A (se figuren under) via en motordriver. En HØY verdi på pinne "pinA1" setter 5V på ledning A1, en LAV verdi på pinne "pinA1" setter 0V på ledning A1 osv. Tilsvarende for pinA2, pinB1 og pinB2. Vi trenger ikke tenke på hvordan motordriveren virker. Motoren skal rotere med en jevn stepphastighet i en retning. Under er det vist en liten sekvens av koden som styrer motoren.

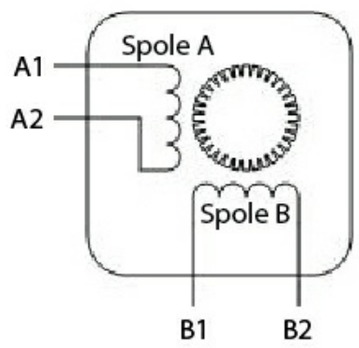


```
digitalWrite(pinA1, LOW);
digitalWrite(pinA2, HIGH);
delay(d);
digitalWrite(pinB1, LOW);
digitalWrite(pinB2, HIGH);
delay(d);
digitalWrite(pinA1, HIGH);
digitalWrite(pinA2, LOW);
delay(d);
digitalWrite(pinB1, HIGH);
digitalWrite(pinB2, LOW);
delay(d);
```

Hvilken kommuteringstype produserer Arduinokoden?

Velg ett alternativ

- Mikrostepp
- Wave
- Halvstepp
- Fullstepp ✔
- Ingen av delene

Maks poeng: 3

14 For en steppermotor som vist i databladet med spesifisert vinkel på 1.8 grader mellom hver fullstep-posisjon, anta at vi wave-kommuterer den med en forsinkelse på 20ms mellom hver wavestep-posisjon, hva blir omdreiningshastigheten?

Velg ett svar

- 20 rpm
- 48 rpm
- 24 rpm
- 30 rpm
- 15 rpm ✔

Maks poeng: 4

15 For en DC motor, hvilket utsagn er riktig for en steady state situasjon? Med belastning mener vi dreiemomentet lasten yter på motoren, og med hastighet mener vi vinkelhastighet. Effekt inn er gitt av spenning ganger strøm. Effekt ut (uten tap) er gitt av dreiemoment*vinkelhastighet.

Velg ett svar

- Når belastningen er konstant, er hastigheten omtrent lineært avhengig av påført spenning. Når påført spenning er konstant er hastigheten omtrent lineært avhengig av belastningen ✔
- Belastningen er omtrent proposjonal med strømmen. Effekt inn og ut er størst ved minimal hastighet, derfor må aldri en DC motor belastes for fullt før den kommer opp i en viss hastighet
- Belastningen er omtrent proposjonal med strømmen. Effekt inn er størst ved maksimal hastighet
- Den induserte spenningen øker med belastingen. Maksimal hastighet er omtrent gitt av spenning delt på motorkonstant
- Så lenge motoren ikke overbelastes er hastighet for en gitt spenning uavhengig av belastningen. Hastigheten er gitt av motorkonstantene

Maks poeng: 6

16 Vi skal lage Arduinokode for å lese av en rotasjons quadraturenkoder. Quadratursignalet skal gjøres om til en variabel som representerer vinkelen. Et eksempel på en rotasjons quadraturenkoder er vist i medfølgende datablad. Koden her er laget for lesbarhet og ikke optimalisert.

Velg ett svar

```
// ---------------------------------------------- start kode
int vinkel;
void setup() {
  pinMode(13, INPUT); // fase A
  pinMode(12, INPUT); // fase B
}
void loop() {
 int a = digitalRead(13);
 int b = digitalRead(12);

 if (a==HIGH && b==LOW)
  vinkel++;
 if (a==LOW && b==HIGH)
  vinkel--;
}
// ---------------------------------------------- slutt kode
```

```
// ---------------------------------------------- start kode
int vinkel;
void setup() {
  pinMode(13, INPUT); // fase A
  pinMode(12, INPUT); // fase B
}
void loop() {
 int a = digitalRead(13);
 int b = digitalRead(12);
 if (a==LOW && b==LOW)
  vinkel = 0;
 if (a==HIGH && b==LOW)
  vinkel = 1;
 if (a==LOW && b==HIGH)
  vinkel = 2;
 if (a==HIGH && b==HIGH)
  vinkel = 3;
}
// ---------------------------------------------- slutt kode
```

```
// ---------------------------------------------- start kode
int vinkel;
void setup() {
  pinMode(13, INPUT); // fase A
  pinMode(12, INPUT); // fase B
}
void loop() {
 int a = digitalRead(13);
 int b = digitalRead(12);

 if (a==HIGH && b==LOW)
  vinkel--;
 if (a==LOW && b==HIGH)
  vinkel++;
}
// ---------------------------------------------- slutt kode
```

```
// ---------------------------------------------- start kode
int vinkel;
int currentState, nextState;
void setup() {
  pinMode(13, INPUT); // fase A
  pinMode(12, INPUT); // fase B
  currentState = 0;
}
void loop() {
 int a = digitalRead(13);
 int b = digitalRead(12);
 if (a==LOW && b==LOW)
  nextState = 0;
 if (a==HIGH && b==LOW)
  nextState = 1;
 if (a==HIGH && b==HIGH)
  nextState = 2;
 if (a==LOW && b==HIGH)
  nextState = 3;
 if ( (nextState == (currentState+1)) or (nextState==0 and currentState==3) )
   vinkel++;
 if ( (nextState== (currentState-1)) or (nextState==3 and currentState==0) )
   vinkel--;
  currentState = nextState;
}
// ---------------------------------------------- slutt kode

// ---------------------------------------------- start kode
int vinkel;
int currentState, nextState;
void setup() {
  pinMode(13, INPUT); // fase A
  pinMode(12, INPUT); // fase B
  currentState = 0;
}
void loop() {
 int a = digitalRead(13);
 int b = digitalRead(12);
 if (a==LOW && b==LOW)
  nextState = 0;
 if (a==LOW && b==HIGH)
  nextState = 1;
 if (a==HIGH&& b==LOW)
  nextState = 2;
 if (a==HIGH && b==HIGH)
  nextState = 3;
 if (nextState>currentState or (nextState==0 and currentState==3) )
   vinkel++;
 if (nextState<currentState or (nextState==3 and currentState==0))
   vinkel--;
  currentState = nextState;
}
// ---------------------------------------------- slutt kode
```

Maks poeng: 8

17 Vi ønsker å styre en DC motor med en H-bru av typen TB6612FNG se vedlagte datablad. Vi setter opp og kobler

- TB6612FNG's pinne IN1 (AIN1) til Arduino's pinne 13,
- TB6612FNG's pinne IN2 (AIN2) til Arduino's pinne 12,
- TB6612FNG's pinne PWM (PWMA) til Arduino's pinne 11,
- TB6612FNG's pinne STBY til Arduino's pinne 10
- TB6612FNG's pinner OUT1 (AO1), og OUT2 (AO2) kobles til DC motoren.

Vi tilordner følgende konstanter
IN1 = 13;
IN2 = 12;
PWM =11;
STBY = 10;

Hvilke av følgende kodesekvenser vil kjøre motoren med konstant spenning i kun en retning, samt stoppe motoren?

Velg ett alternativ

```
// --------------------------- start kode
digitalWrite(STBY, HIGH);
digitalWrite(PWM, LOW);
digitalWrite(IN1, HIGH);
digitalWrite(IN2, HIGH);
dealy(1000);
digitalWrite(IN1, LOW);
digitalWrite(IN2, LOW);
// --------------------------- slutt kode
```

```
// --------------------------- start kode
digitalWrite(STBY, HIGH);
digitalWrite(PWM, HIGH);
digitalWrite(IN1, HIGH);
digitalWrite(IN2, HIGH);
dealy(1000);
digitalWrite(STBY, LOW);
// --------------------------- slutt kode
```

```
// --------------------------- start kode
digitalWrite(STBY, HIGH);
digitalWrite(PWM, HIGH);
digitalWrite(IN1, LOW);
digitalWrite(IN2, HIGH);
dealy(1000);
digitalWrite(IN1, HIGH);
// --------------------------- slutt kode
```

```
// --------------------------- start kode
digitalWrite(STBY, HIGH);
digitalWrite(PWM, HIGH);
digitalWrite(IN1, HIGH);
digitalWrite(IN2, LOW);
dealy(1000);
digitalWrite(IN1, LOW);
digitalWrite(IN2, HIGH);
// --------------------------- slutt kode
```

```
// --------------------------- start kode
digitalWrite(STBY, HIGH);
digitalWrite(PWM, HIGH);
digitalWrite(IN1, HIGH);
digitalWrite(IN2, HIGH);
dealy(1000);
digitalWrite(PWM, LOW);
digitalWrite(IN1, LOW);
digitalWrite(IN2, LOW);
// --------------------------- slutt kode
```

Maks poeng: 7

Question 10
Attached

LTC1096/LTC1096L
LTC1098/LTC1098L

Micropower Sampling 8-Bit Serial I/O A/D Converters

FEATURES

- **80μA Maximum Supply Current**
- **1nA Typical Supply Current in Shutdown**
- **8-Pin SO Plastic Package**
- **5V Operation (LTC1096/LTC1098)**
- **3V Operation (LTC1096L/LTC1098L)(2.65V Min)**
- Sample-and-Hold
- 16μs Conversion Time
- 33kHz Sample Rate
- ±0.5LSB Total Unadjusted Error Over Temp
- Direct 3-Wire Interface to Most MPU Serial Ports and All MPU Parallel I/O Ports

APPLICATIONS

- Battery-Operated Systems
- Remote Data Acquisition
- Battery Monitoring
- Battery Gas Gauges
- Temperature Measurement
- Isolated Data Acquisition

LT, LTC and LT are registered trademarks of Linear Technology Corporation.

DESCRIPTION

The LTC®1096/LTC1096L/LTC1098/LTC1098L are micropower, 8-bit A/D converters that draw only 80μA of supply current when converting. They automatically power down to 1nA typical supply current whenever they are not performing conversions. They are packaged in 8-pin SO packages and have both 3V (L) and 5V versions. These 8-bit, switched-capacitor, successive approximation ADCs include sample-and-hold. The LTC1096/LTC1096L have a single differential analog input. The LTC1098/LTC1098L offer a software selectable 2-channel MUX.

On-chip serial ports allow efficient data transfer to a wide range of microprocessors and microcontrollers over three wires. This, coupled with micropower consumption, makes remote location possible and facilitates transmitting data through isolation barriers.

These circuits can be used in ratiometric applications or with an external reference. The high impedance analog inputs and the ability to operate with reduced spans (below 1V full scale) allow direct connection to sensors and transducers in many applications, eliminating the need for gain stages.

TYPICAL APPLICATION

10μW, S8 Package, 8-Bit A/D Samples at 200Hz and Runs Off a 5V Battery

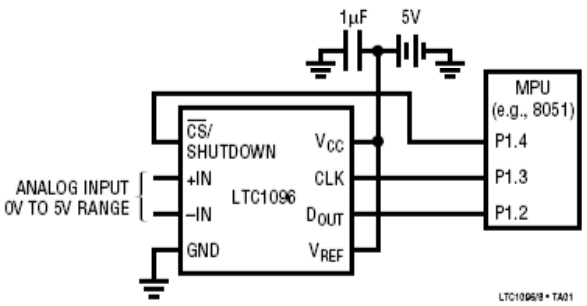

Supply Current vs Sample Rate

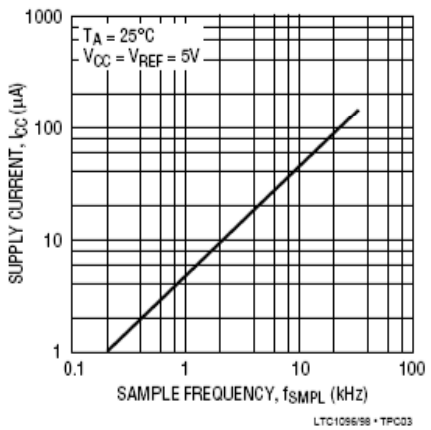

ABSOLUTE MAXIMUM RATINGS (Notes 1 and 2)

Supply Voltage (V_{CC}) to GND 12V
Voltage
- Analog and Reference ..... −0.3V to V_{CC} + 0.3V
- Digital Inputs ..... −0.3V to 12V
- Digital Outputs ..... −0.3V to V_{CC} + 0.3V

Power Dissipation 500mW
Storage Temperature Range ..... −65°C to 150°C

Operating Temperature
- LTC1096AC/LTC1096C/LTC1096LC/
  LTC1098AC/LTC1098C/LTC1098LC ..... 0°C to 70°C
- LTC1096AI/LTC1096I/LTC1096LI/
  LTC1098AI/LTC1098I/LTC1098LI ..... −40°C to 85°C

Lead Temperature (Soldering, 10 sec.) ..... 300°C

PACKAGE/ORDER INFORMATION (Notes 3)

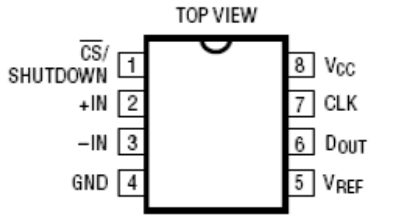

N8 PACKAGE 8-LEAD PLASTIC DIP — S8 PACKAGE 8-LEAD PLASTIC SOIC

T_{JMAX} = 150°C, θ_{JA} = 130°C/W (N8)
T_{JMAX} = 150°C, θ_{JA} = 175°C/W (S8)

S8 PART MARKING

1096	1096I	1096L
1096A	1096IA	1096LI

ORDER PART NUMBER

LTC1096ACN8
LTC1096ACS8
LTC1096AIN8
LTC1096AIS8
LTC1096CN8
LTC1096CS8
LTC1096IN8
LTC1096IS8
LTC1096LCS8
LTC1096LIS8

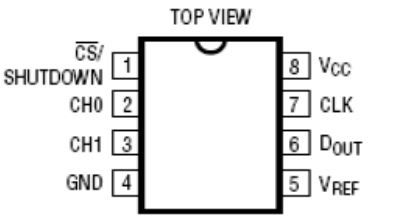

N8 PACKAGE 8-LEAD PLASTIC DIP — S8 PACKAGE 8-LEAD PLASTIC SOIC

T_{JMAX} = 150°C, θ_{JA} = 130°C/W (N8)
T_{JMAX} = 150°C, θ_{JA} = 175°C/W (S8)

S8 PART MARKING

1098	1098I	1098L
1098A	1098IA	1098LI

ORDER PART NUMBER

LTC1098ACN8
LTC1098ACS8
LTC1098AIN8
LTC1098AIS8
LTC1098CN8
LTC1098CS8
LTC1098IN8
LTC1098IS8
LTC1098LCS8
LTC1098LIS8

Consult factory for Military grade parts.

RECOMMENDED OPERATING CONDITIONS

LTC1096/LTC1098

SYMBOL	PARAMETER	CONDITIONS	MIN	TYP	MAX	UNITS
V_{CC}	Supply Voltage	LTC1096 LTC1098	3.0 3.0		9 6	V V
V_{CC} = 5V Operation						
f_{CLK}	Clock Frequency	V_{CC} = 5V	25		500	kHz
t_{CYC}	Total Cycle Time	LTC1096, f_{CLK} = 500kHz LTC1098, f_{CLK} = 500kHz	29 29			µs µs
t_{hDI}	Hold Time, D_{IN} After CLK↑	V_{CC} = 5V	150			ns
$t_{su\overline{CS}}$	Setup Time $\overline{CS}$↓ Before First CLK↑ (See Operating Sequence)	V_{CC} = 5V, LTC1096 V_{CC} = 5V, LTC1098	500 500			ns ns
t_{WAKEUP}	Wake-Up Time $\overline{CS}$↓ Before First CLK↓ After First CLK↑ (See Figure 1 LTC1096 Operating Sequence)	V_{CC} = 5V, LTC1096	10			µs
	Wake-Up Time $\overline{CS}$↓ Before MSBF Bit CLK↓ (See Figure 2 LTC1098 Operating Sequence)	V_{CC} = 5V, LTC1098	10			µs
t_{suDI}	Setup Time, D_{IN} Stable Before CLK↑	V_{CC} = 5V	400			ns
t_{WHCLK}	CLK High Time	V_{CC} = 5V	0.8			µs

RECOMMENDED OPERATING CONDITIONS

LTC1096/LTC1098

SYMBOL	PARAMETER	CONDITIONS	MIN	TYP	MAX	UNITS
t_{WLCLK}	CLK Low Time	V_{CC} = 5V	0.8			µs
$t_{WH\overline{CS}}$	$\overline{CS}$ High Time Between Data Transfer Cycles	V_{CC} = 5V	1			µs
$t_{WL\overline{CS}}$	$\overline{CS}$ Low Time During Data Transfer	LTC1096, f_{CLK} = 500kHz LTC1098, f_{CLK} = 500kHz	28 28			µs µs
V_{CC} = 3V Operation						
f_{CLK}	Clock Frequency	V_{CC} = 3V	25		250	kHz
t_{CYC}	Total Cycle Time	LTC1096, f_{CLK} = 250kHz LTC1098, f_{CLK} = 250kHz	58 58			µs µs
t_{hDI}	Hold Time, D_{IN} After CLK↑	V_{CC} = 3V	450			ns
$t_{su\overline{CS}}$	Setup Time $\overline{CS}$↓ Before First CLK↑ (See Operating Sequence)	V_{CC} = 3V, LTC1096 V_{CC} = 3V, LTC1098	1 1			µs µs
t_{WAKEUP}	Wake-Up Time $\overline{CS}$↓ Before First CLK↓ After First CLK↑ (See Figure 1 LTC1096 Operating Sequence)	V_{CC} = 3V, LTC1096	10			µs
	Wake-Up Time $\overline{CS}$↓ Before MSBF Bit CLK↓ (See Figure 2 LTC1098 Operating Sequence)	V_{CC} = 3V, LTC1098	10			µs
t_{suDI}	Setup Time, D_{IN} Stable Before CLK↑	V_{CC} = 3V	1			µs
t_{WHCLK}	CLK High Time	V_{CC} = 3V	1.6			µs
t_{WLCLK}	CLK Low Time	V_{CC} = 3V	1.6			µs
$t_{WH\overline{CS}}$	$\overline{CS}$ High Time Between Data Transfer Cycles	V_{CC} = 3V	2			µs
$t_{WL\overline{CS}}$	$\overline{CS}$ Low Time During Data Transfer	LTC1096, f_{CLK} = 250kHz LTC1098, f_{CLK} = 250kHz	56 56			µs µs

LTC1096L/LTC1098L

SYMBOL	PARAMETER	CONDITIONS	MIN	TYP	MAX	UNITS
V_{CC}	Supply Voltage		2.65		4.0	V
f_{CLK}	Clock Frequency	V_{CC} = 2.65V	25		250	kHz
t_{CYC}	Total Cycle Time	LTC1096L, f_{CLK} = 250kHz LTC1098L, f_{CLK} = 250kHz	58 58			µs µs
t_{hDI}	Hold Time, D_{IN} After CLK↑	V_{CC} = 2.65V	450			ns
$t_{su\overline{CS}}$	Setup Time $\overline{CS}$↓ Before First CLK↑ (See Operating Sequence)	V_{CC} = 2.65V, LTC1096L V_{CC} = 2.65V, LTC1098L	1 1			µs µs
t_{WAKEUP}	Wake-Up Time $\overline{CS}$↓ Before First CLK↓ After First CLK↑ (See Figure 1, LTC1096L Operating Sequence)	V_{CC} = 2.65V, LTC1096L	10			µs
	Wake-Up Time $\overline{CS}$↓ Before MSBF Bit CLK↓ (See Figure 2, LTC1098L Operating Sequence)	V_{CC} = 2.65V, LTC1098L	10			µs
t_{suDI}	Setup Time, D_{IN} Stable Before CLK↑	V_{CC} = 2.65V	1			µs
t_{WHCLK}	CLK High Time	V_{CC} = 2.65V	1.6			µs
t_{WLCLK}	CLK Low Time	V_{CC} = 2.65V	1.6			µs
$t_{WH\overline{CS}}$	$\overline{CS}$ High Time Between Data Transfer Cycles	V_{CC} = 2.65V	2			µs
$t_{WL\overline{CS}}$	$\overline{CS}$ Low Time During Data Transfer	LTC1096L, f_{CLK} = 250kHz LTC1098L, f_{CLK} = 250kHz	56 56			µs µs

CONVERTER AND MULTIPLEXER CHARACTERISTICS

LTC1096/LTC1098

V_{CC} = 5V, V_{REF} = 5V, f_{CLK} = 500kHz, unless otherwise noted.

PARAMETER	CONDITIONS		LTC1096A/LTC1098A MIN	TYP	MAX	LTC1096/LTC1098 MIN	TYP	MAX	UNITS
Resolution (No Missing Code)		●	8			8			Bits
Offset Error		●			±0.5			±0.5	LSB
Linearity Error	(Note 4)	●			±0.5			±0.5	LSB
Full Scale Error		●			±0.5			±1.0	LSB
Total Unadjusted Error (Note 5)	V_{REF} = 5.000V	●			±0.5			±1.0	LSB
Analog Input Range	(Notes 6, 7)		−0.05V to V_{CC} + 0.05V						V
REF Input Range (Notes 6, 7)	4.5 ≤ V_{CC} ≤ 6V 6V < V_{CC} ≤ 9V, LTC1096		−0.05V to V_{CC} + 0.05V −0.05V to 6V						V V
Analog Input Leakage Current	(Note 8)	●			±1.0			±1.0	µA

LTC1096/LTC1098

V_{CC} = 3V, V_{REF} = 2.5V, f_{CLK} = 250kHz, unless otherwise noted.

PARAMETER	CONDITIONS		LTC1096A/LTC1098A MIN	TYP	MAX	LTC1096/LTC1098 MIN	TYP	MAX	UNITS
Resolution (No Missing Code)		●	8			8			Bits
Offset Error		●			±0.75			±1.0	LSB
Linearity Error	(Notes 4, 9)	●			±0.5			±1.0	LSB
Full-Scale Error		●			±1.0			±1.0	LSB
Total Unadjusted Error (Notes 5, 9)	V_{REF} = 2.500V	●			±1.0			±1.5	LSB
Analog Input Range	(Notes 6, 7)		−0.05V to V_{CC} + 0.05V						V
REF Input Range (Notes 6, 7, 9)	3V ≤ V_{CC} ≤ 6V		−0.05V to V_{CC} + 0.05V						V
Analog Input Leakage Current	(Notes 8, 9)	●			±1.0			±1.0	µA

LTC1096L/LTC1098L

V_{CC} = 2.65V, V_{REF} = 2.5V, f_{CLK} = 250kHz, unless otherwise noted.

PARAMETER	CONDITIONS		LTC1096L/LTC1098L MIN	TYP	MAX	UNITS
Resolution (No Missing Code)		●	8			Bits
Offset Error		●			±1.0	LSB
Linearity Error	(Note 4)	●			±1.0	LSB
Full-Scale Error		●			±1.0	LSB
Total Unadjusted Error (Notes 5)	V_{REF} = 2.5V	●			±1.5	LSB
Analog Input Range	(Notes 6, 7)		−0.05V to V_{CC} + 0.05V			V
REF Input Range (Note 6)	2.65V ≤ V_{CC} ≤ 4.0V		−0.05V to V_{CC} + 0.05V			V
Analog Input Leakage Current	(Note 8)	●			±1.0	µA

DIGITAL AND DC ELECTRICAL CHARACTERISTICS

LTC1096/LTC1098

V_{CC} = 5V, V_{REF} = 5V, unless otherwise noted.

SYMBOL	PARAMETER	CONDITIONS		MIN	TYP	MAX	UNITS
V_{IH}	High Level Input Voltage	V_{CC} = 5.25V	●	2.0			V
V_{IL}	Low Level Input Voltage	V_{CC} = 4.75V	●			0.8	V
I_{IH}	High Level Input Current	V_{IN} = V_{CC}	●			2.5	µA
I_{IL}	Low Level Input Current	V_{IN} = 0V	●			–2.5	µA
V_{OH}	High Level Output Voltage	V_{CC} = 4.75V, I_O = 10µA V_{CC} = 4.75V, I_O = 360µA	● ●	4.5 2.4	4.74 4.72		V V
V_{OL}	Low Level Output Voltage	V_{CC} = 4.75V, I_O = 1.6mA	●			0.4	V
I_{OZ}	Hi-Z Output Leakage	$\overline{CS} \geq V_{IH}$	●			±3.0	µA
I_{SOURCE}	Output Source Current	V_{OUT} = 0V			–25		mA
I_{SINK}	Output Sink Current	V_{OUT} = V_{CC}			45		mA
I_{REF}	Reference Current	$\overline{CS}$ = V_{CC} $t_{CYC} \geq$ 200µs, $f_{CLK} \leq$ 50kHz t_{CYC} = 29µs, f_{CLK} = 500kHz	● ● ●		0.001 3.500 35.000	2.5 7.5 50.0	µA µA µA
I_{CC}	Supply Current	$\overline{CS}$ = V_{CC}	●		0.001	3.0	µA
		LTC1096, $t_{CYC} \geq$ 200µs, $f_{CLK} \leq$ 50kHz LTC1096, t_{CYC} = 29µs, f_{CLK} = 500kHz	● ●		40 120	80 180	µA µA
		LTC1098, $t_{CYC} \geq$ 200µs, $f_{CLK} \leq$ 50kHz LTC1098, t_{CYC} = 29µs, f_{CLK} = 500kHz	● ●		44 155	88 230	µA µA

LTC1096/LTC1098

V_{CC} = 3V, V_{REF} = 2.5V, unless otherwise noted.

SYMBOL	PARAMETER	CONDITIONS		MIN	TYP	MAX	UNITS
V_{IH}	High Level Input Voltage	V_{CC} = 3.6V	●	1.9			V
V_{IL}	Low Level Input Voltage	V_{CC} = 3V	●			0.45	V
I_{IH}	High Level Input Current (Note 9)	V_{IN} = V_{CC}	●			2.5	µA
I_{IL}	Low Level Input Current (Note 9)	V_{IN} = 0V	●			–2.5	µA
V_{OH}	High Level Output Voltage	V_{CC} = 3V, I_O = 10µA V_{CC} = 3V, I_O = 360µA	● ●	2.3 2.1	2.69 2.64		V V
V_{OL}	Low Level Output Voltage	V_{CC} = 3V, I_O = 400µA	●			0.3	V
I_{OZ}	Hi-Z Output Leakage (Note 9)	$\overline{CS} \geq V_{IH}$	●			±3.0	µA
I_{SOURCE}	Output Source Current (Note 9)	V_{OUT} = 0V			–10		mA
I_{SINK}	Output Sink Current (Note 9)	V_{OUT} = V_{CC}			15		mA
I_{REF}	Reference Current (Note 9)	$\overline{CS}$ = V_{CC} $t_{CYC} \geq$ 200µs, $f_{CLK} \leq$ 50kHz t_{CYC} = 58µs, f_{CLK} = 250kHz	● ● ●		0.001 3.500 35.000	2.5 7.5 50.0	µA µA µA
I_{CC}	Supply Current (Note 9)	$\overline{CS}$ = V_{CC}	●		0.001	3.0	µA
		LTC1096, $t_{CYC} \geq$ 200µs, $f_{CLK} \leq$ 50kHz LTC1096, t_{CYC} = 58µs, f_{CLK} = 250kHz	● ●		40 120	80 180	µA µA
		LTC1098, $t_{CYC} \geq$ 200µs, $f_{CLK} \leq$ 50kHz LTC1098, t_{CYC} = 58µs, f_{CLK} = 250kHz	● ●		44 155	88 230	µA µA

DIGITAL AND DC ELECTRICAL CHARACTERISTICS

LTC1096L/LTC1098L

V_{CC} = 2.65V, V_{REF} = 2.5V, f_{CLK} = 250kHz, unless otherwise noted.

SYMBOL	PARAMETER	CONDITIONS		MIN	TYP	MAX	UNITS
V_{IH}	High Level Input Voltage	V_{CC} = 3.6V	●	1.9			V
V_{IL}	Low Level Input Voltage	V_{CC} = 2.65V	●			0.45	V
I_{IH}	High Level Input Current	$V_{IN} = V_{CC}$	●			2.5	µA
I_{IL}	Low Level Input Current	V_{IN} = 0V	●			–2.5	µA
V_{OH}	High Level Output Voltage	V_{CC} = 2.65V, I_O = 10µA V_{CC} = 2.65V, I_O = 360µA	● ●	2.3 2.1	2.64 2.50		V V
V_{OL}	Low Level Output Voltage	V_{CC} = 2.65V, I_O = 400µA	●			0.3	V
I_{OZ}	Hi-Z Output Leakage	$\overline{CS}$ = High	●			±3.0	µA
I_{SOURCE}	Output Source Current	V_{OUT} = 0V			–10		mA
I_{SINK}	Output Sink Current	$V_{OUT} = V_{CC}$			15		mA
I_{REF}	Reference Current	$\overline{CS} = V_{CC}$ $t_{CYC} \geq$ 200µs, $f_{CLK} \leq$ 50kHz t_{CYC} = 58µs, f_{CLK} = 250kHz	● ● ●		0.001 3.500 35.000	2.5 7.5 50.0	µA µA µA
I_{CC}	Supply Current	$\overline{CS} = V_{CC}$	●		0.001	3.0	µA
		LTC1096L, $t_{CYC} \geq$ 200µs, $f_{CLK} \leq$ 50kHz LTC1096L, t_{CYC} = 58µs, f_{CLK} = 250kHz	● ●		40 120	80 180	µA µA
		LTC1098L, $t_{CYC} \geq$ 200µs, $f_{CLK} \leq$ 50kHz LTC1098L, t_{CYC} = 58µs, f_{CLK} = 250kHz	● ●		44 155	88 230	µA µA

AC CHARACTERISTICS

LTC1096/LTC1098

V_{CC} = 5V, V_{REF} = 5V, f_{CLK} = 500kHz, unless otherwise noted.

SYMBOL	PARAMETER	CONDITIONS		MIN	TYP	MAX	UNITS
t_{SMPL}	Analog Input Sample Time	See Operating Sequence			1.5		CLK Cycles
$f_{SMPL(MAX)}$	Maximum Sampling Frequency		●	33			kHz
t_{CONV}	Conversion Time	See Operating Sequence			8		CLK Cycles
t_{dDO}	Delay Time, CLK↓ to D_{OUT} Data Valid	See Test Circuits	●		200	450	ns
t_{dis}	Delay Time, $\overline{CS}$↑ to D_{OUT} Hi-Z	See Test Circuits	●		170	450	ns
t_{en}	Delay Time, CLK↓ to D_{OUT} Enable	See Test Circuits	●		60	250	ns
t_{hDO}	Time Output Data Remains Valid After CLK↓	C_{LOAD} = 100pF			180		ns
t_f	D_{OUT} Fall Time	See Test Circuits	●		70	250	ns
t_r	D_{OUT} Rise Time	See Test Circuits	●		25	100	ns
C_{IN}	Input Capacitance	Analog Inputs On Channel Analog Inputs Off Channel			25 5		pF pF
		Digital Input			5		pF

AC CHARACTERISTICS

LTC1096/LTC1098

V_{CC} = 3V, V_{REF} = 2.5V, f_{CLK} = 250kHz, unless otherwise noted.

SYMBOL	PARAMETER	CONDITIONS		MIN	TYP	MAX	UNITS
t_{SMPL}	Analog Input Sample Time	See Operating Sequence			1.5		CLK Cycles
$f_{SMPL(MAX)}$	Maximum Sampling Frequency		●	16.5			kHz
t_{CONV}	Conversion Time	See Operating Sequence			8		CLK Cycles
t_{dDO}	Delay Time, CLK↓ to D_{OUT} Data Valid	See Test Circuits (Note 9)	●		500	1000	ns
t_{dis}	Delay Time, $\overline{CS}$↑ to D_{OUT} Hi-Z	See Test Circuits (Note 9)	●		220	800	ns
t_{en}	Delay Time, CLK↓ to D_{OUT} Enable	See Test Circuits (Note 9)	●		160	480	ns
t_{hDO}	Time Output Data Remains Valid After CLK↓	C_{LOAD} = 100pF			400		ns
t_f	D_{OUT} Fall Time	See Test Circuits (Note 9)	●		70	250	ns
t_r	D_{OUT} Rise Time	See Test Circuits (Note 9)	●		50	150	ns
C_{IN}	Input Capacitance	Analog Inputs On Channel Analog Inputs Off Channel			25 5		pF pF
		Digital Input			5		pF

LTC1096L/LTC1098L

V_{CC} = 2.65V, V_{REF} = 2.5V, f_{CLK} = 250kHz, unless otherwise noted.

SYMBOL	PARAMETER	CONDITIONS		MIN	TYP	MAX	UNITS
t_{SMPL}	Analog Input Sample Time	See Operating Sequence			1.5		CLK Cycles
$f_{SMPL(MAX)}$	Maximum Sampling Frequency		●	16.5			kHz
t_{CONV}	Conversion Time	See Operating Sequence			8		CLK Cycles
t_{dDO}	Delay Time, CLK↓ to D_{OUT} Data Valid	See Test Circuits	●		500	1000	ns
t_{dis}	Delay Time, $\overline{CS}$↑ to D_{OUT} Hi-Z	See Test Circuits	●		220	800	ns
t_{en}	Delay Time, CLK↓ to D_{OUT} Enable	See Test Circuits	●		160	480	ns
t_{hDO}	Time Output Data Remains Valid After CLK↓	C_{LOAD} = 100pF			400		ns
t_f	D_{OUT} Fall Time	See Test Circuits	●		70	250	ns
t_r	D_{OUT} Rise Time	See Test Circuits	●		50	200	ns
C_{IN}	Input Capacitance	Analog Inputs On Channel Analog Inputs Off Channel			25 5		pF pF
		Digital Input			5		pF

The ● denotes specifications which apply over the operating temperature range.

Note 1: Absolute Maximum Ratings are those values beyond which the life of a device may be impaired.

Note 2: All voltage values are with respect to GND.

Note 3: For the 8-lead PDIP, consult the factory.

Note 4: Linearity error is specified between the actual and points of the A/D transfer curve.

Note 5: Total unadjusted error includes offset, full scale, linearity, multiplexer and hold step errors.

Note 6: Two on-chip diodes are tied to each reference and analog input which will conduct for reference or analog input voltages one diode drop below GND or one diode drop above V_{CC}. This spec allows 50mV forward bias of either diode. This means that as long as the reference or analog input does not exceed the supply voltage by more than 50mV, the output code will be correct. To achieve an absolute 0V to 5V input voltage range will therefore require a minimum supply voltage of 4.950V over initial tolerance, temperature variations and loading. For 5.5V < V_{CC} ≤ 9V, reference and analog input range cannot exceed 5.55V. If reference and analog input range are greater than 5.55V, the output code will not be guaranteed to be correct.

Note 7: The supply voltage range for the LTC1096L/LTC1098L is from 2.65V to 4V. The supply voltage range for the LTC1096 is from 3V to 9V, but the supply voltage range for the LTC1098 is only from 3V to 6V.

Note 8: Channel leakage current is measured after the channel selection.

Note 9: These specifications are either correlated from 5V specifications or guaranteed by design.

PIN FUNCTIONS

LTC1096/LTC1096L

$\overline{CS}$/SHDN (Pin 1): Chip Select Input. A logic low on this input enables the LTC1096/LTC1096L. A logic high on this input disables the LTC1096/LTC1096L and disconnects the power to the LTC1096/LTC1096L.

IN⁺ (Pin 2): Analog Input. This input must be free of noise with respect to GND.

IN⁻ (Pin 3): Analog Input. This input must be free of noise with respect to GND.

GND (Pin 4): Analog Ground. GND should be tied directly to an analog ground plane.

V_{REF} (Pin 5): Reference Input. The reference input defines the span of the A/D converter and must be kept free of noise with respect to GND.

D_{OUT} (Pin 6): Digital Data Output. The A/D conversion result is shifted out of this output.

CLK (Pin 7): Shift Clock. This clock synchronizes the serial data transfer.

V_{CC} (Pin 8): Power Supply Voltage. This pin provides power to the A/D converter. It must be free of noise and ripple by bypassing directly to the analog ground plane.

LTC1098/LTC1098L

$\overline{CS}$/SHDN (Pin 1): Chip Select Input. A logic low on this input enables the LTC1098/LTC1098L. A logic high on this input disables the LTC1098/LTC1098L and disconnects the power to the LTC1098/LTC1098L.

CH0 (Pin 2): Analog Input. This input must be free of noise with respect to GND.

CH1 (Pin 3): Analog Input. This input must be free of noise with respect to GND.

GND (Pin 4): Analog Ground. GND should be tied directly to an analog ground plane.

D_{IN} (Pin 5): Digital Data Input. The multiplexer address is shifted into this pin.

D_{OUT} (Pin 6): Digital Data Output. The A/D conversion result is shifted out of this output.

CLK (Pin 7): Shift Clock. This clock synchronizes the serial data transfer.

V_{CC} (V_{REF})(Pin 8): Power Supply Voltage. This pin provides power and defines the span of the A/D converter. It must be free of noise and ripple by bypassing directly to the analog ground plane.

BLOCK DIAGRAM

LTC1096/LTC1096L

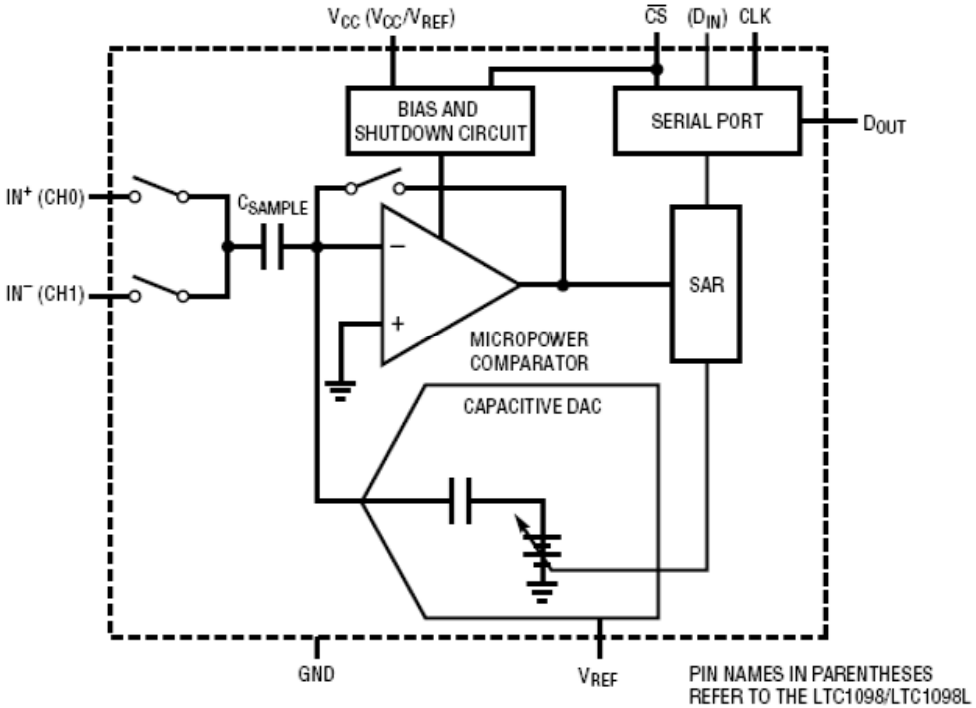

Question 14
Attached

DIMENSIONS

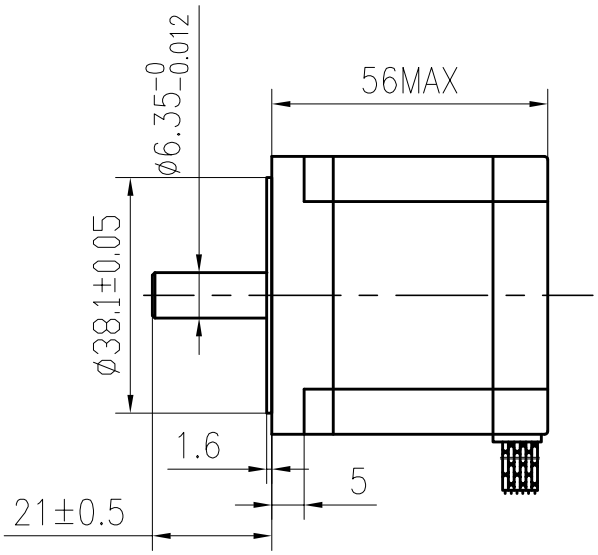

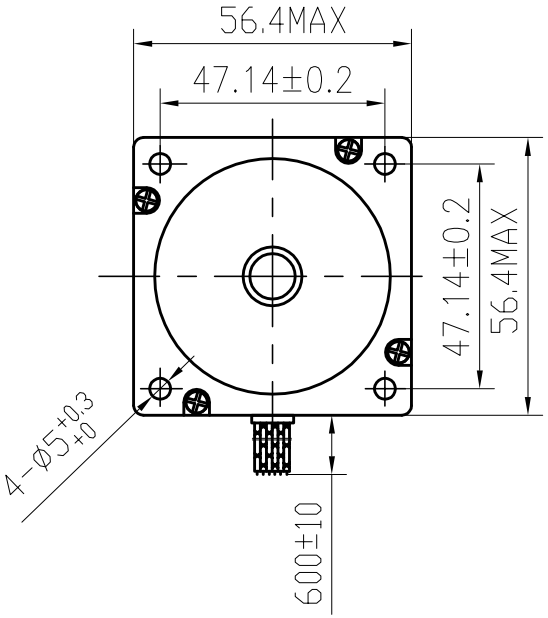

SPECIFICATIONS unit=mm

			COMMENT
PHASE	相数	2 PHASE	
STEP ANGLE	步距角	1.8± 5% ° /STEP	
VOLTAGE	静电压	3.2V	
CURRENT	电流	2.0 A/PHASE	
RESISTANCE	电阻	1.6± 10% Ω/PHASE	
INDUCTANCE	电感	5.5± 20% mH/PHASE	
HOLDING TORQUE	静转矩	120 N.cm Min	
DETENT TORQUE	定位转矩	3.5 N.cm Max	
INSULATION CLASS	绝缘等级	B	
LEAD STYLE	引出线规格	AWG22 UL1007	
ROTOR TORQUE	转动惯量	280 g.cm^2	

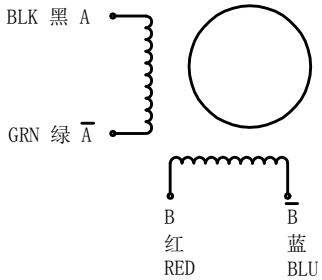

旧底图号	
底图总号	
日期	签名

更改标记		更改单号	签名	日期
A				
设计		ANDY	2015.5.7	
审核				
工艺				
标准化				
批准				

57BYGH420-2

技术规格书

WANTAI MOTOR

等级标记	重量	比例

1 共 张

www.wantmotor.com

格式（1） 制图： 描图： 幅面：3#

Question 16
Attached

CHINA YUMO ELECTRIC CO.,LIMITED
YUEQING YING'S IMPORT & EXPORT CO.,LTD
ADD: ZHAOYANG INDUSTRIAL ZONE, LIUSHI TOWN, YUEQING CITY, ZHEJIANG, 325604 CHINA
TEL: 0086-577-62791815 FAX: 0086-577-62791825
Http://www.yumoelectric.com E-mail:sales@yingselectric.com

A6A2 series

Incremental Rotary Encoder

YUMO®

◆**Substitute: E6A2**

●Mini type encoder
●Outside Diameter φ25 Model: A6A2

◆**Features**

Miniature rotary encoder for positioning in space-confined areas
●Wide variety of supply voltages and output forms to match input devices
●Models with zero index function ideal for position applications
●High resolution models（300 or 360 pulses per revolution）substantially improve measuring accuracy
●High response frequency and noise immunity make encoders ideal for factory automation applications

◆Ordering Information

A 6 A 2 - C W Z 6 C

- **A** — Sequence Number
- **6** — Outside Diameter φ25
- **A** — Incremental Rotary Encoder
- **C** — B: PNP Open Collector Output; C: NPN Open Collector Output; E: Voltage Output; GH: NPN Push Pull Output; EH: PNP Voltage Output; X: Line Driver Output
- **W** — S: Singleness Output A; W: AB90° Phase Difference
- **Z** — Z: +Zero signal
- **6** — 1: DC5V; 3: DC5~12V; 5: DC12~24V; 6: DC5~24V
- **C** — B: PNP Open Collector Output; C: NPN Open Collector Output; E: Voltage Output; GH: NPN Push Pull Output; EH: PNP Voltage Output; X: Line Driver Output

◆**Note:**

1, Please contact sales representative to confirm the correctness and availability of the part number

◆Technical Specifications

Output Phases	Power Supply Voltage	Output Configuration	Substitution	Resolution (pulses/rotation)
Phase A	5 to 12 VDC	Voltage Output	A6A2-CS3E	10, 20, 60, 100, 200, 300, 360
				500
		Open-collector Output (NPN Output)	A6A2-CS3C	10, 20, 60, 100, 200, 300, 360
				500
	12 to 24 VDC		A6A2-CS5C	10, 20, 60, 100, 200, 300, 360
				500
Phase A and B	5 to 12 VDC	Voltage Output	A6A2-CW3E	100 200 360
				500
		Open-collector Output (NPN Output)	A6A2-CW3C	100 200 360
				500
	12 to 24 VDC		A6A2-CW5C	100 200 360
				500
Phase A, B, and Z	5 to 12 VDC	Voltage Output	A6A2-CWZ3E	100 200 360
				500
		Open-collector Output (NPN Output)	A6A2-CWZ3C	100 200 360
				500
	12 to 24 VDC		A6A2-CWZ5C	100 200 360
				500

CHINA YUMO ELECTRIC CO.,LIMITED
YUEQING YING'S IMPORT & EXPORT CO.,LTD
ADD: ZHAOYANG INDUSTRIAL ZONE, LIUSHI TOWN, YUEQING CITY, ZHEJIANG, 325604 CHINA
TEL: 0086-577-62791815 FAX: 0086-577-62791825
Http://www.yumoelectric.com E-mail:sales@yingselectric.com

A6A2 series

Incremental Rotary Encoder

YUMO®

◆Ratings and Specifications

Model / Item	A6A2-CS3E	A6A2-CS3C	A6A2-CS5C	A6A2-CW3E	A6A2-CW3C	A6A2-CW5C	A6A2-CWZ3E	A6A2-CWZ3C	A6A2-CWZ5C
Power supply Voltage	5 VDC-5% to 12 V+10%, ripple (p-p): 5% max.		12 VDC-10% to 24 V+15%, ripple (p-p): 5% max.	5 VDC-5% to 12 V+10%, ripple (p-p): 5% max.		12 VDC-10% to 24 V+15%, ripple (p-p): 5% max.	5 VDC-5% to 12 V+10%, ripple (p-p): 5% max.		12 VDC-10% to 24 V+15%, ripple (p-p): 5% max.
Current Consumption	30mA max	20mA max		30mA max	20mA max			30mA max	
Resolution (See Note1)	10, 20, 60, 100, 200, 300, 360, 500			10, 200, 360, 500					
Output Phases	Phase A			Phase A and B			Phase A, B, and Z		
Output Form	Voltage Output	NPN Open-collector Output		Voltage Output	NPN Open-collector Output		Voltage Output	NPN Open-collector Output	
Output Capacity	Output Resistance: 2KΩ Output Current: 20mA max. Residual Voltage:0.4V max (Output current: 20mA max.)	Applied Voltage: 30VDC max. Sink Current: 30mA max. Residual Voltage: 0.4Vmax (at sink current of 30mA)		Output Resistance: 2KΩ Output Current: 20mA max. Residual Voltage:0.4V max (Output current: 20mA max.)	Applied Voltage: 30VDC max. Sink Current: 30mA max. Residual Voltage: 0.4Vmax (at sink current of 30mA)		Output Resistance: 2KΩ Output Current: 20mA max. Residual Voltage:0.4V max (Output current: 20mA max.)	Applied Voltage: 30VDC max. Sink Current: 30mA max. Residual Voltage: 0.4Vmax (at sink current of 30mA)	
Maximum Response Frequency	30kHZ								
Phase Difference of Output	---			Phase difference between phases A and B: 90°±45°					
Output Waveform Percentage	50±25%			---					
Output Rise And Fall Times	1.0μs max. (Cable length: 2m, Sink current: 10 mA)	1.0μs max. (Cable length: 2m, Control output voltage: 5V, Load resistance 1kΩ)		1.0μs max. (Cable length: 2m, Sink current: 10 mA)	1.0μs max. (Cable length: 2m, Control output voltage: 5V, Load resistance 1kΩ)		1.0μs max. (Cable length: 2m, Sink current: 10 mA)	1.0μs max. (Cable length: 2m, Control output voltage: 5V, Load resistance 1kΩ)	

◆Note:

*1. An inrush current of approximately 9A will flow for approximately 0.3ms when the power is turned ON.
*2. The maximum electrical response revolution is determined by the resolution and maximum response frequency as follows：

Maximum Electrical Response Frequency (Rpm) = Maximum Response Frequency/ Resolution*60

This means that the A6A2 encoder will not operate electrically if its shaft speed exceeds the maximum electrical response revolution
*3. No protection is provided against water or oil.

CHINA YUMO ELECTRIC CO.,LIMITED
YUEQING YING'S IMPORT & EXPORT CO.,LTD
ADD: ZHAOYANG INDUSTRIAL ZONE, LIUSHI TOWN, YUEQING CITY, ZHEJIANG, 325604 CHINA
TEL: 0086-577-62791815 FAX: 0086-577-62791825
Http://www.yumoelectric.com E-mail:sales@yingselectric.com

A6A2 series

Incremental Rotary Encoder

YUMO®

Mechanical Specifications		
Starting Torque		1mN.m max
Moment Of Inertia		1 x 10^{-7}kg.m^2 max.
Shaft Loading	Radial	10N
	Thrust	50N
Mounting Tolerance		Radial: 0.03mm TIR Max; Axial:0.2mm Max; Shaft Runout: 0.1° Max
Allowable Shaft Load		Radial: 5N; Axial: 3N
Maximum Rotating Speed		5000 rpm
Ambient Temperature Range		Operating: -10 to 55℃ (with no icing), Storage: -25 to 80℃ (with no icing)
Ambient Humidity Range		Operating/storage:35% to 85% (with no condensation)
Insulation Resistance		20 MΩ min. (at 500 VDC) between current-carrying parts and case
Dielectric Strength		500 VAC, 50/60 Hz for 1 min between current-carrying parts and case
Vibration Resistance		Destruction: 10 to 55 Hz, 1.5-mm double amplitude for 2 hours each in X, Y, and Z directions
Shock Resistance		Destruction: 500m/s^2 3 times each in X, Y, and Z directions
Degree Of Protection		IEC 60529 IP50
Connection Method		Pre-wired Models (Standard cable length: 2 m)
Weight		Approx. 60g
Accessories		Coupling, Servo Mounting Bracket (provided with the E6A2-CWZ□), Hexagonal wrench, Instruction manual

---

◆I/O Circuit Diagrams

Model	Output circuits	Output mode
A6A2-CS3C A6A2-CS5C	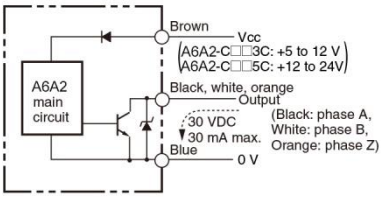	Output transistor 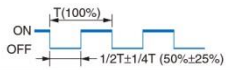
A6A2-CW3C A6A2-CW5C		Direction of rotation: CW (as viewed from end of shaft) Output transistor 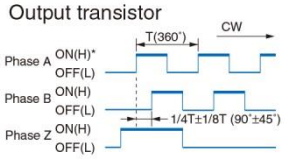
A6A2-CWZ3C A6A2-CWZ5C		
A6A2-CW3E	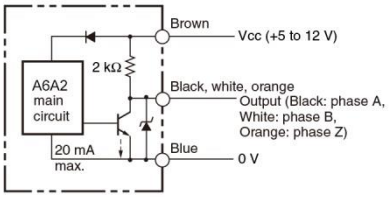	Direction of rotation: CCW (as viewed from end of shaft) Output transistor 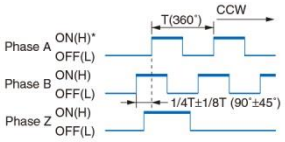
A6A2-CWZ3E		
A6A2-CS3E		Output transistor 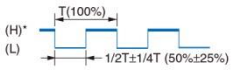

Color	Signal
Brown	Vcc
Black	Phase A
White	Phase B
Orange	Phase Z
Blue	0 V (common)

Note: 1. The white and orange wires of Single Models (A6A2-CS□□) do not output signals (no connection).
2. The white and orange wires of Single Models (A6A2-CS□□) do not output signals (no connection).
3. Voltage Output Models are capable of sinking a maximum current of 20 mA.

Note: 1. *(H) and (L) indicate the output levels of Voltage Output Models.
2. Output A leads B by 1/4 T±1/8 T when the shaft revolves clockwise, while A lags behind B by 1/4 T±1/8 T when the shaft revolves counterclockwise.

CHINA YUMO ELECTRIC CO.,LIMITED
YUEQING YING'S IMPORT & EXPORT CO.,LTD
ADD: ZHAOYANG INDUSTRIAL ZONE, LIUSHI TOWN, YUEQING CITY, ZHEJIANG, 325604 CHINA
TEL: 0086-577-62791815 FAX: 0086-577-62791825
Http://www.yumoelectric.com E-mail:sales@yingselectric.com

◆Dimensions(mm)

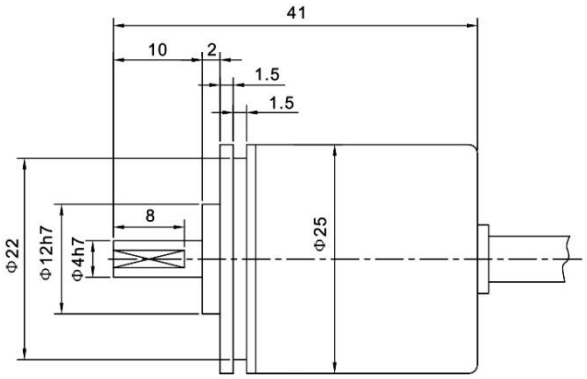

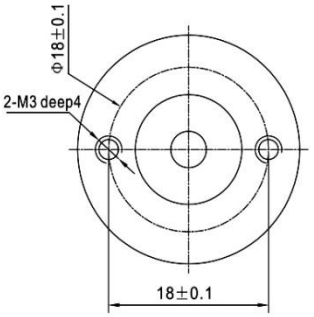

Question 17
Attached

Toshiba Bi-CD Integrated Circuit Silicon Monolithic

TB6612FNG

Driver IC for Dual DC motor

TB6612FNG is a driver IC for DC motor with output transistor in LD MOS structure with low ON-resistor. Two input signals, IN1 and IN2, can choose one of four modes such as CW, CCW, short brake, and stop mode.

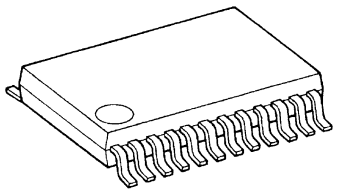

SSOP24-P-300-0.65A

質量: 0.14 g (標準)

Features

- Power supply voltage; V_M = 15 V(Max)
- Output current; I_{OUT}=1.2 A(ave) / 3.2 A (peak)
- Output low ON resistor; 0.5Ω (upper+lower Typ. @$V_M \geq 5$ V)
- Standby (Power save) system
- CW / CCW / short brake / stop function modes
- Built-in thermal shutdown circuit and low voltage detecting circuit
- Small faced package(SSOP24: 0.65 mm Lead pitch)
- Response to Pb free packaging

* This product has a MOS structure and is sensitive to electrostatic discharge. When handling this product, ensure that the environment is protected against electrostatic discharge by using an earth strap, a conductive mat and an ionizer. Ensure also that the ambient temperature and relative humidity are maintained at reasonable levels.

The TB6612FNG is a Pb-free product.
The following conditions apply to solderability:
*Solderability
1. Use of Sn-37Pb solder bath
   *solder bath temperature = 230°C
   *dipping time = 5 seconds
   *number of times = once
   *use of R-type flux
2. Use of Sn-3.0Ag-0.5Cu solder bath
   *solder bath temperature = 245°C
   *dipping time = 5 seconds

Block Diagram

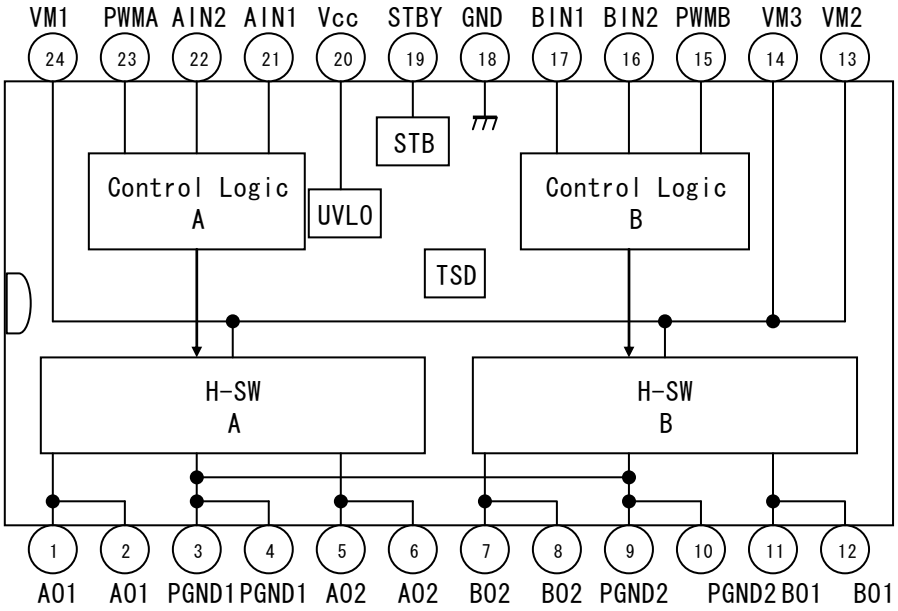

Pin Functions

No.	Pin Name	I/O	Function
1	AO1	O	ch A output1
2	AO1		
3	PGND1	—	Power GND 1
4	PGND1		
5	AO2	O	ch A output2
6	AO2		
7	BO2	O	ch B output2
8	BO2		
9	PGND2	—	Power GND 2
10	PGND2		
11	BO1	O	ch B output1
12	BO1		
13	VM2	—	Motor supply (2.5 V to 13.5 V)
14	VM3		
15	PWMB	I	ch B PWM input / 200 kΩ pull-down at internal
16	BIN2	I	ch B input 2 / 200 kΩ pull-down at internal
17	BIN1	I	ch B input 1 / 200 kΩ pull-down at internal
18	GND	—	Small signal GND
19	STBY	I	“L”=standby / 200 kΩ pull-down at internal
20	Vcc	—	Small signal supply
21	AIN1	I	ch A input 1 / 200 kΩ pull-down at internal
22	AIN2	I	ch A input 2 / 200 kΩ pull-down at internal
23	PWMA	I	ch A PWM input / 200 kΩ pull-down at internal
24	VM1	—	Motor supply (2.5 V~13.5 V)

Absolute Maximum Ratings (Ta = 25°C)

Characteristics	Symbol	Rating	Unit	Remarks
Supply voltage	V_M	15	V	
	V_{CC}	6		
Input voltage	V_{IN}	-0.2 to 6	V	IN1,IN2,STBY,PWM pins
Output voltage	V_{OUT}	15	V	O1,O2 pins
Output current	I_{OUT}	1.2	A	Per 1 ch
	I_{OUT} (peak)	2		tw = 20 ms Continuous pulse, Duty ≤ 20%
		3.2		tw = 10 ms Single pulse
Power dissipation	P_D	0.78	W	IC only
		0.89		50 mm × 50 mm t=1.6 mm Cu ≥ 40% in PCB mounting
		1.36		76.2 mm × 114.3 mm t=1.6 mm Cu ≥ 30% in PCB monting
Operating temperature	T_{opr}	-20 to 85	℃	
Storage temperature	T_{stg}	-55 to 150	℃	

Operating Range (Ta=-20～85℃)

Characteristics	Symbol	Min	Typ.	Max	Unit	Remarks
Supply voltage	V_{CC}	2.7	3	5.5	V	
	V_M	2.5	5	13.5	V	
Output current (H-SW)	I_{OUT}	—	—	1.0	A	$V_M \geq 4.5$ V
		—	—	0.4		4.5 V > $V_M \geq 2.5$ V Without PWM Operation
Switching frequency	f_{PWM}	—	—	100	kHz	

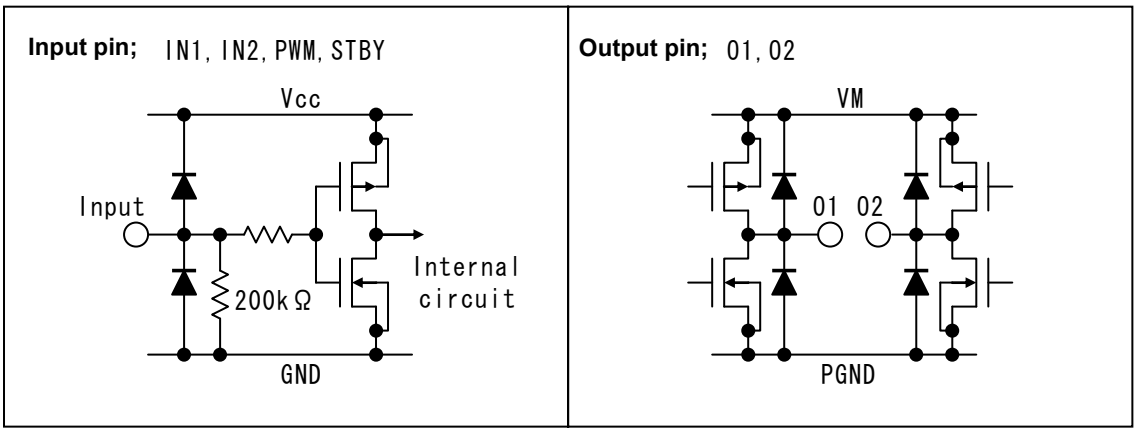

H-SW Control Function

Input				Output		
IN1	IN2	PWM	STBY	OUT1	OUT2	Mode
H	H	H/L	H	L	L	Short brake
L	H	H	H	L	H	CCW
		L	H	L	L	Short brake
H	L	H	H	H	L	CW
		L	H	L	L	Short brake
L	L	H	H	OFF (High impedance)		Stop
H/L	H/L	H/L	L	OFF (High impedance)		Standby

H-SW Operating Description

・To prevent penetrating current, dead time t2 and t4 is provided in switching to each mode in the IC.

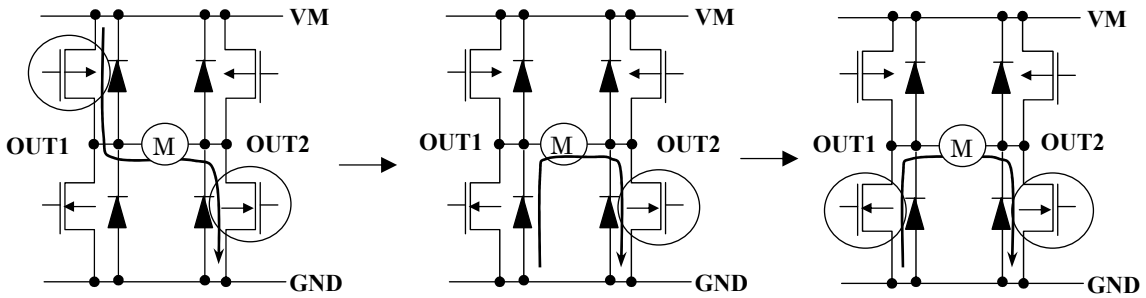

<ON>
t1

<OFF>
t2

<Short brake>
t3

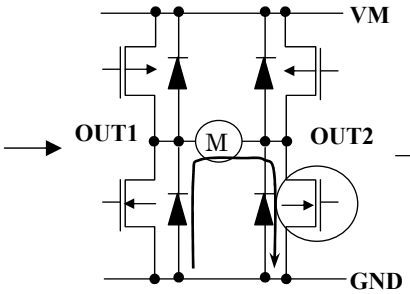

<OFF>
t4

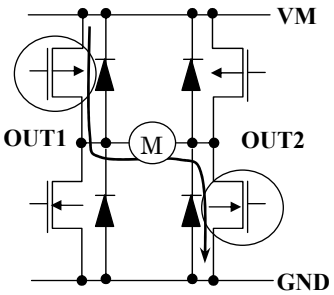

<ON>
t5

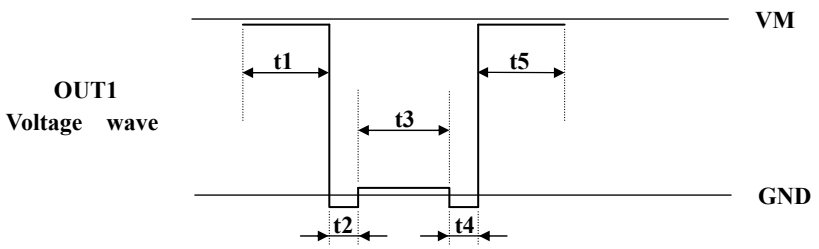

Electrical Characteristics (unless otherwise specified, Ta = 25°C, V_{CC} = 3 V, V_M = 5 V)

Characteristics	Symbol	Test Condition	Min	Typ.	Max	Unit
Supply current	I_{CC}(3V)	STBY = V_{CC} = 3 V, V_M = 5 V	—	1.1	1.8	mA
	I_{CC}(5.5V)	STBY = V_{CC} = 5.5 V, V_M = 5 V	—	1.5	2.2	
	$I_{CC(STB)}$	STBY = 0 V	—	—	1	μA
	$I_{M(STB)}$		—	—	1	
Control input voltage	V_{IH}		V_{CC}×0.7	—	V_{CC}+0.2	V
	V_{IL}		-0.2	—	V_{CC}×0.3	
Control input current	I_{IH}	V_{IN} = 3 V	5	15	25	μA
	I_{IL}	V_{IN} = 0 V	—	—	1	
Standby input voltage	$V_{IH(STB)}$		V_{CC}×0.7	—	V_{CC}+0.2	V
	$V_{IL(STB)}$		-0.2	—	V_{CC}×0.3	
Standby input current	$I_{IH(STB)}$	V_{IN} = 3 V	5	15	25	μA
	$I_{IL(STB)}$	V_{IN} = 0 V	—	—	1	
Output saturating voltage	$V_{sat(U+L)1}$	I_O = 1 A, V_{CC} = V_M = 5 V	—	0.5	0.7	V
	$V_{sat(U+L)2}$	I_O = 0.3 A, V_{CC} = V_M = 5 V		0.15	0.21	
Output leakage current	$I_{L(U)}$	V_M = V_{OUT} = 15 V	—	—	1	μA
	$I_{L(L)}$	V_M = 15 V, V_{OUT} = 0 V	-1	—	—	
Regenerative diode VF	$V_{F(U)}$	I_F = 1A	—	1	1.1	V
	$V_{F(L)}$		—	1	1.1	
Low voltage detecting voltage	UVLD	(Designed value)	—	1.9	—	V
Recovering voltage	UVLC		—	2.2	—	
Response speed	t_r	(Designed value)	—	24	—	ns
	t_f		—	41	—	
	Dead time H to L	Penetration protect time (Designed value)	—	50	—	
	Dead time L to H		—	230	—	
Thermal shutdown circuit operating temperature	TSD	(Designed value)	—	175	—	℃
Thermal shutdown hysteresis	△TSD		—	20	—	

Target characteristics

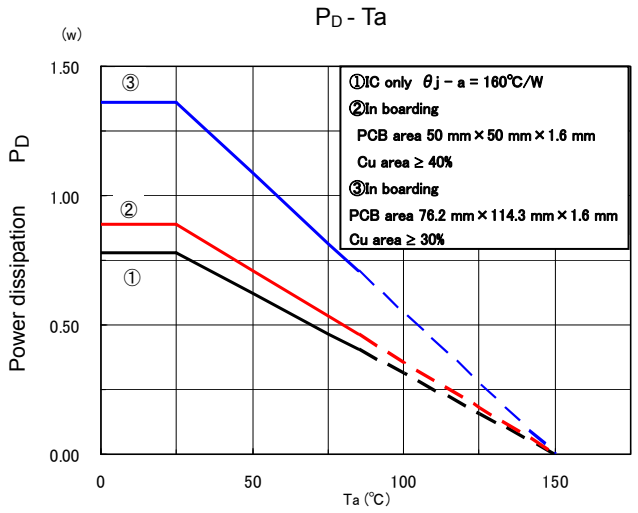

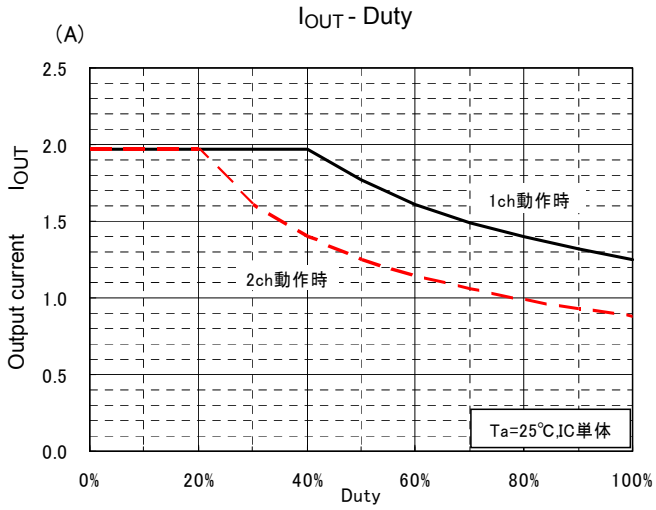

Typical Application Diagram

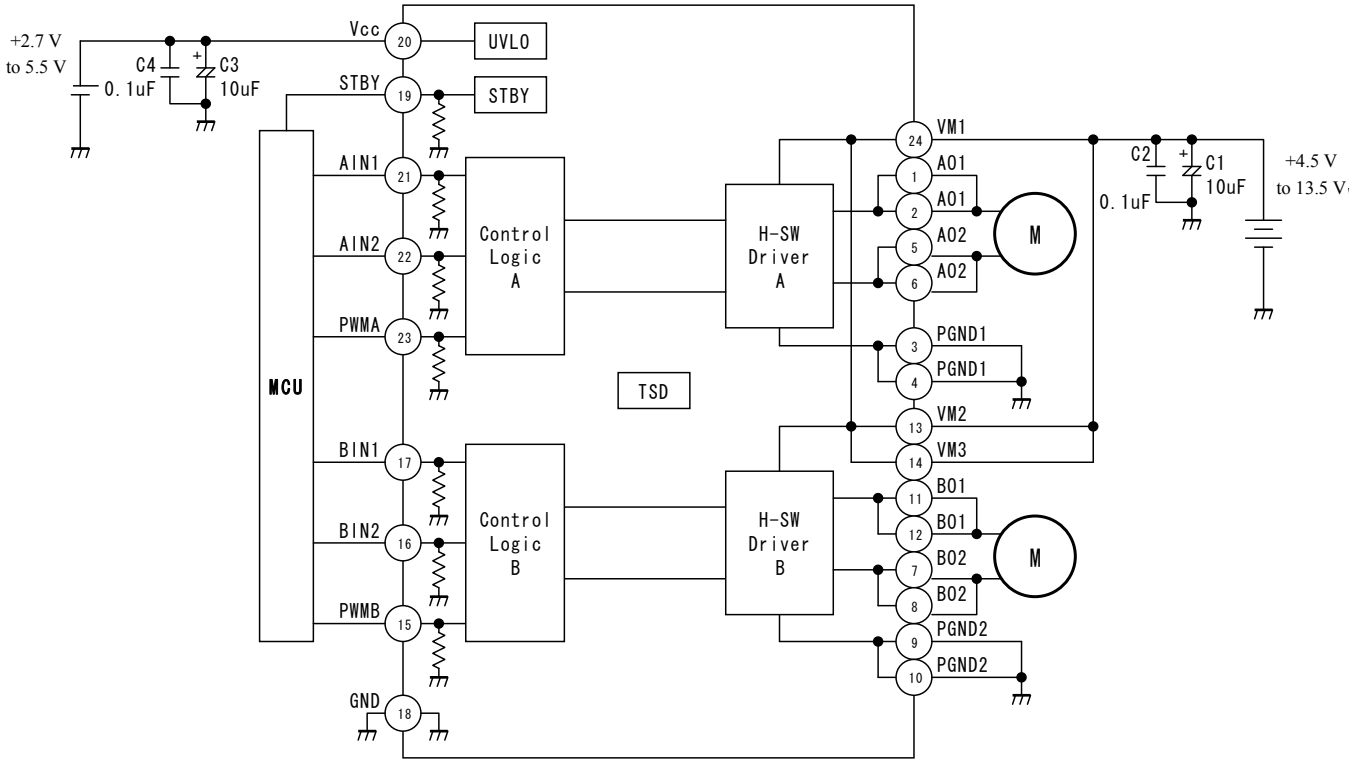

Note: Condensers for noise absorption (C1, C2, C3, and C4) should be connected as close as possible to the IC.

Package Dimennsions

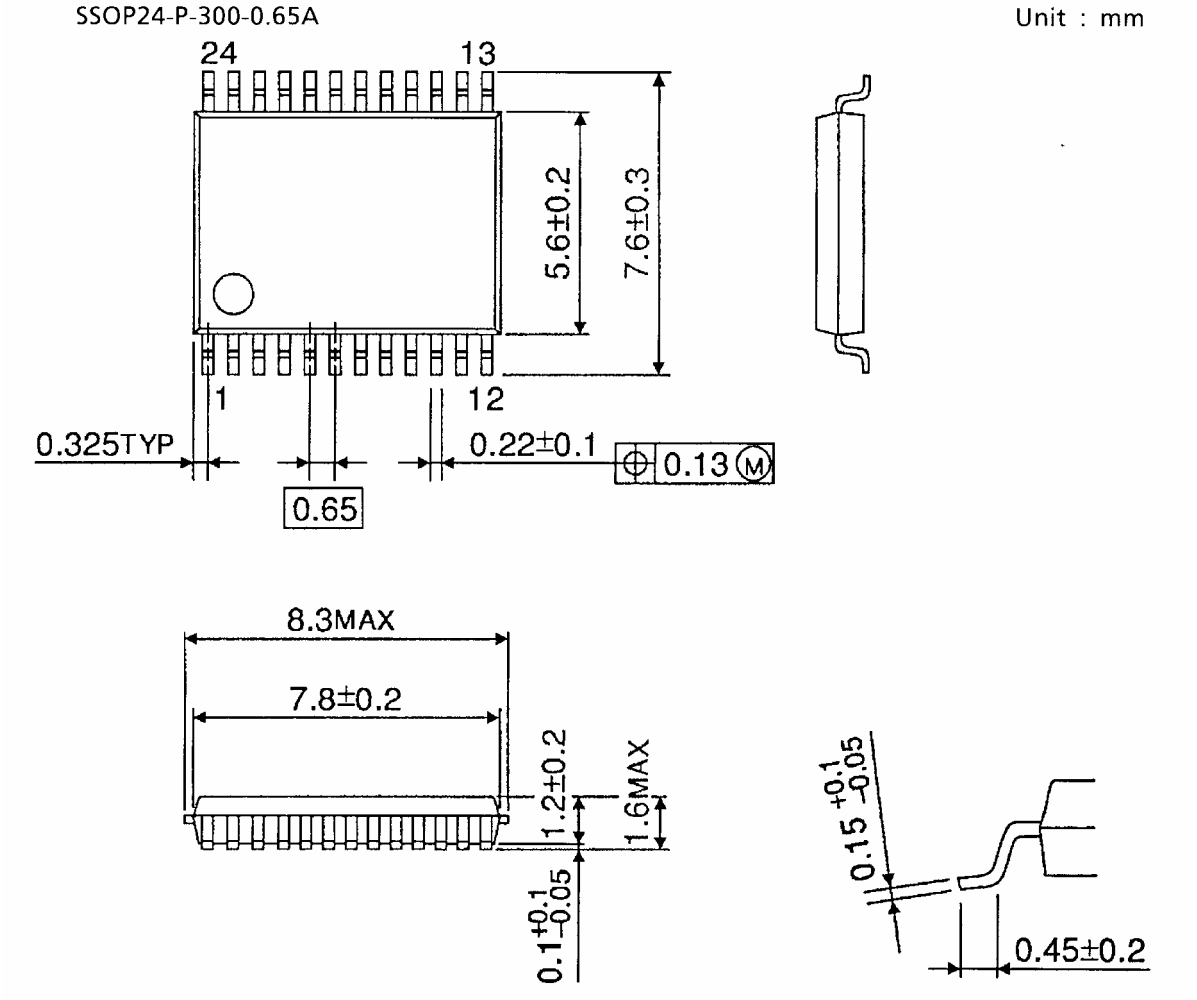

Weght: 0.14 g (typ)

Notes on Contents

1. Block Diagrams

Some of the functional blocks, circuits, or constants in the block diagram may be omitted or simplified for explanatory purposes.

2. Equivalent Circuits

The equivalent circuit diagrams may be simplified or some parts of them may be omitted for explanatory purposes.

3. Timing Charts

Timing charts may be simplified for explanatory purposes.

4. Application Circuits

The application circuits shown in this document are provided for reference purposes only. Thorough evaluation is required, especially at the mass production design stage.
Toshiba does not grant any license to any industrial property rights by providing these examples of application circuits.

5. Test Circuits

Components in the test circuits are used only to obtain and confirm the device characteristics. These components and circuits are not guaranteed to prevent malfunction or failure from occurring in the application equipment.

IC Usage Considerations

Notes on handling of ICs

[1] The absolute maximum ratings of a semiconductor device are a set of ratings that must not be exceeded, even for a moment. Do not exceed any of these ratings.
Exceeding the rating(s) may cause the device breakdown, damage or deterioration, and may result injury by explosion or combustion.

[2] Use an appropriate power supply fuse to ensure that a large current does not continuously flow in case of over current and/or IC failure. The IC will fully break down when used under conditions that exceed its absolute maximum ratings, when the wiring is routed improperly or when an abnormal pulse noise occurs from the wiring or load, causing a large current to continuously flow and the breakdown can lead smoke or ignition. To minimize the effects of the flow of a large current in case of breakdown, appropriate settings, such as fuse capacity, fusing time and insertion circuit location, are required.

[3] If your design includes an inductive load such as a motor coil, incorporate a protection circuit into the design to prevent device malfunction or breakdown caused by the current resulting from the inrush current at power ON or the negative current resulting from the back electromotive force at power OFF. IC breakdown may cause injury, smoke or ignition.
Use a stable power supply with ICs with built-in protection functions. If the power supply is unstable, the protection function may not operate, causing IC breakdown. IC breakdown may cause injury, smoke or ignition.

[4] Do not insert devices in the wrong orientation or incorrectly.
Make sure that the positive and negative terminals of power supplies are connected properly.
Otherwise, the current or power consumption may exceed the absolute maximum rating, and exceeding the rating(s) may cause the device breakdown, damage or deterioration, and may result injury by explosion or combustion.
In addition, do not use any device that is applied the current with inserting in the wrong orientation or incorrectly even just one time.

Points to remember on handling of ICs

(1) Thermal Shutdown Circuit

Thermal shutdown circuits do not necessarily protect ICs under all circumstances. If the thermal shutdown circuits operate against the over temperature, clear the heat generation status immediately.

Depending on the method of use and usage conditions, such as exceeding absolute maximum ratings can cause the thermal shutdown circuit to not operate properly or IC breakdown before operation.

(2) Heat Radiation Design

In using an IC with large current flow such as power amp, regulator or driver, please design the device so that heat is appropriately radiated, not to exceed the specified junction temperature (T_J) at any time and condition. These ICs generate heat even during normal use. An inadequate IC heat radiation design can lead to decrease in IC life, deterioration of IC characteristics or IC breakdown. In addition, please design the device taking into considerate the effect of IC heat radiation with peripheral components.

(3) Back-EMF

When a motor rotates in the reverse direction, stops or slows down abruptly, a current flow back to the motor's power supply due to the effect of back-EMF. If the current sink capability of the power supply is small, the device's motor power supply and output pins might be exposed to conditions beyond maximum ratings. To avoid this problem, take the effect of back-EMF into consideration in system design.

RESTRICTIONS ON PRODUCT USE

070122EBA_R6

- The information contained herein is subject to change without notice. 021023_D
- TOSHIBA is continually working to improve the quality and reliability of its products. Nevertheless, semiconductor devices in general can malfunction or fail due to their inherent electrical sensitivity and vulnerability to physical stress. It is the responsibility of the buyer, when utilizing TOSHIBA products, to comply with the standards of safety in making a safe design for the entire system, and to avoid situations in which a malfunction or failure of such TOSHIBA products could cause loss of human life, bodily injury or damage to property.
  In developing your designs, please ensure that TOSHIBA products are used within specified operating ranges as set forth in the most recent TOSHIBA products specifications. Also, please keep in mind the precautions and conditions set forth in the "Handling Guide for Semiconductor Devices," or "TOSHIBA Semiconductor Reliability Handbook" etc. 021023_A
- The TOSHIBA products listed in this document are intended for usage in general electronics applications (computer, personal equipment, office equipment, measuring equipment, industrial robotics, domestic appliances, etc.). These TOSHIBA products are neither intended nor warranted for usage in equipment that requires extraordinarily high quality and/or reliability or a malfunction or failure of which may cause loss of human life or bodily injury ("Unintended Usage"). Unintended Usage include atomic energy control instruments, airplane or spaceship instruments, transportation instruments, traffic signal instruments, combustion control instruments, medical instruments, all types of safety devices, etc. Unintended Usage of TOSHIBA products listed in this document shall be made at the customer's own risk. 021023_B
- The products described in this document shall not be used or embedded to any downstream products of which manufacture, use and/or sale are prohibited under any applicable laws and regulations. 060106_Q
- The information contained herein is presented only as a guide for the applications of our products. No responsibility is assumed by TOSHIBA for any infringements of patents or other rights of the third parties which may result from its use. No license is granted by implication or otherwise under any patents or other rights of TOSHIBA or the third parties. 070122_C
- Please use this product in compliance with all applicable laws and regulations that regulate the inclusion or use of controlled substances.
  Toshiba assumes no liability for damage or losses occurring as a result of noncompliance with applicable laws and regulations. 060819_AF
- The products described in this document are subject to foreign exchange and foreign trade control laws. 060925_E