Introduction to Robotics (Fag 3480)

[redacted]

Robert Wood (Harward Engineeering and Applied Sciences-Basis)
Ole Jakob Elle, PhD (Modified for IFI/UIO)
Førsteamanuensis II, Institutt for Informatikk
Universitetet i Oslo
Seksjonsleder Teknologi,
Intervensjonssenteret, Oslo Universitetssykehus (Rikshospitalet)

Ch. 3: Forward and Inverse Kinematics

Recap: The Denavit-Hartenberg (DH) Convention

Representing each individual homogeneous transformation as the product of four basic transformations:

$$A_i = \mathbf{Rot}_{z,\theta_i}\mathbf{Trans}_{z,d_i}\mathbf{Trans}_{x,a_i}\mathbf{Rot}_{x,\alpha_i}$$

$$= \begin{bmatrix} c_{\theta_i} & -s_{\theta_i} & 0 & 0 \\ s_{\theta_i} & c_{\theta_i} & 0 & 0 \\ 0 & 0 & 1 & 0 \\ 0 & 0 & 0 & 1 \end{bmatrix} \begin{bmatrix} 1 & 0 & 0 & 0 \\ 0 & 1 & 0 & 0 \\ 0 & 0 & 1 & d_i \\ 0 & 0 & 0 & 1 \end{bmatrix} \begin{bmatrix} 1 & 0 & 0 & a_i \\ 0 & 1 & 0 & 0 \\ 0 & 0 & 1 & 0 \\ 0 & 0 & 0 & 1 \end{bmatrix} \begin{bmatrix} 1 & 0 & 0 & 0 \\ 0 & c_{\alpha_i} & -s_{\alpha_i} & 0 \\ 0 & s_{\alpha_i} & c_{\alpha_i} & 0 \\ 0 & 0 & 0 & 1 \end{bmatrix}$$

$$= \begin{bmatrix} c_{\theta_i} & -s_{\theta_i}c_{\alpha_i} & s_{\theta_i}s_{\alpha_i} & a_i c_{\theta_i} \\ s_{\theta_i} & c_{\theta_i}c_{\alpha_i} & -c_{\theta_i}s_{\alpha_i} & a_i s_{\theta_i} \\ 0 & s_{\alpha_i} & c_{\alpha_i} & d_i \\ 0 & 0 & 0 & 1 \end{bmatrix}$$

Recap: the physical basis for DH parameters

a_i: link length, distance between the o_0 and o_1 (projected along x_1)

α_i: link twist, angle between z_0 and z_1 (measured around x_1)

d_i: link offset, distance between o_0 and o_1 (projected along z_0)

θ_i: joint angle, angle between x_0 and x_1 (measured around z_0)

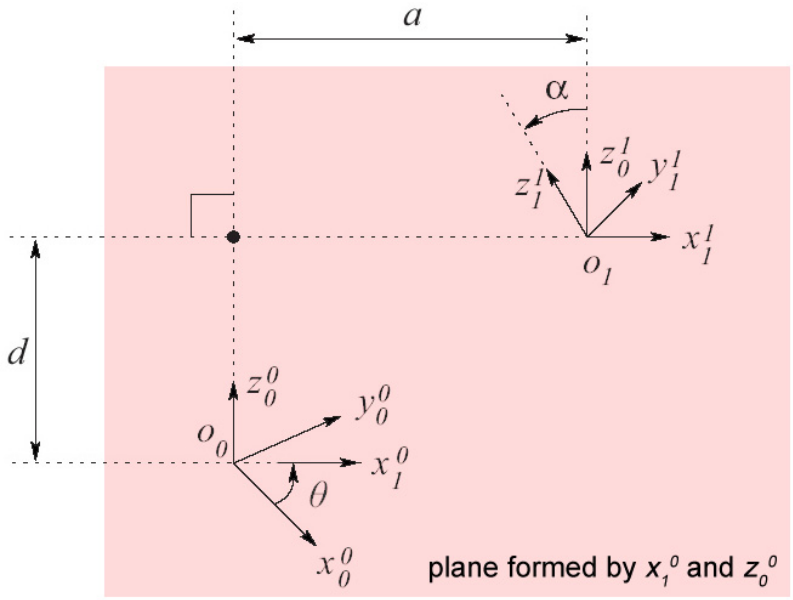

General procedure for determining forward kinematics

- Label joint axes as z_0, …, z_{n-1} (axis z_i is joint axis for joint i+1)
- Choose base frame: set o_0 on z_0 and choose x_0 and y_0 using right-handed convention
- For i=1:n-1,
  - Place o_i where the normal to z_i and z_{i-1} intersects z_i. If z_i intersects z_{i-1}, put o_i at intersection. If z_i and z_{i-1} are parallel, place o_i along z_i such that d_i=0
  - x_i is the common normal through o_i, or normal to the plane formed by z_{i-1} and z_i if the two intersect
  - Determine y_i using right-handed convention
- Place the tool frame: set z_n parallel to z_{n-1}
- For i=1:n, fill in the table of DH parameters
- Form homogeneous transformation matrices, A_i
- Create T_n^0 that gives the position and orientation of the end-effector in the inertial frame

Example 2: three-link cylindrical robot

3DOF: need to assign four coordinate frames

Choose z_0 axis (axis of rotation for joint 1, base frame)

Choose z_1 axis (axis of translation for joint 2)

Choose z_2 axis (axis of translation for joint 3)

Choose z_3 axis (tool frame)

This is again arbitrary for this case since we have described no wrist/gripper

Instead, define z_3 as parallel to z_2

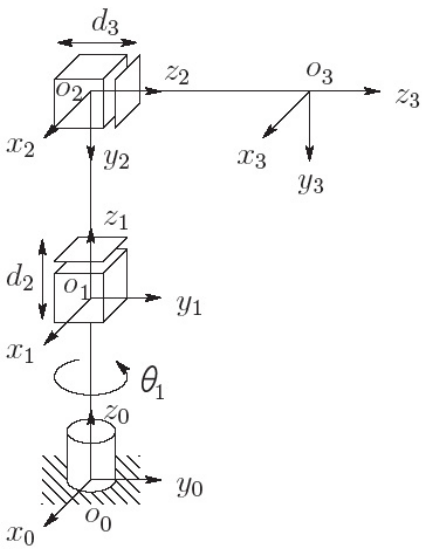

Example 2: three-link cylindrical robot

Now define DH parameters

First, define the constant parameters a_i, α_i

Second, define the variable parameters θ_i, d_i

link	a_i	α_i	d_i	θ_i
1	0	0	d_1	θ_1
2	0	-90	d_2	0
3	0	0	d_3	0

$$A_1 = \begin{bmatrix} c_1 & -s_1 & 0 & 0 \\ s_1 & c_1 & 0 & 0 \\ 0 & 0 & 1 & d_1 \\ 0 & 0 & 0 & 1 \end{bmatrix}, A_2 = \begin{bmatrix} 1 & 0 & 0 & 0 \\ 0 & 0 & 1 & 0 \\ 0 & -1 & 0 & d_2 \\ 0 & 0 & 0 & 1 \end{bmatrix}, A_3 = \begin{bmatrix} 1 & 0 & 0 & 0 \\ 0 & 1 & 0 & 0 \\ 0 & 0 & 1 & d_3 \\ 0 & 0 & 0 & 1 \end{bmatrix}$$

$$T_3^0 = A_1 A_2 A_3 = \begin{bmatrix} c_1 & 0 & -s_1 & -s_1 d_3 \\ s_1 & 0 & c_1 & c_1 d_3 \\ 0 & -1 & 0 & d_1 + d_2 \\ 0 & 0 & 0 & 1 \end{bmatrix}$$

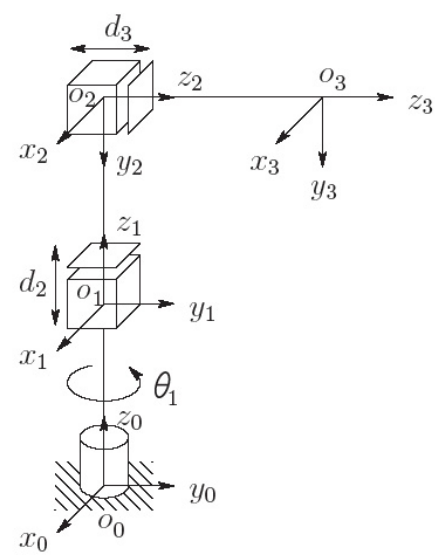

RIKSHOSPITALET HELSE SØR-ØST

Example 3: spherical wrist

3DOF: need to assign four coordinate frames

yaw, pitch, roll (θ_4, θ_5, θ_6) all intersecting at one point *o* (wrist center)

Choose z_3 axis (axis of rotation for joint 4)

Choose z_4 axis (axis of rotation for joint 5)

Choose z_5 axis (axis of rotation for joint 6)

Choose tool frame:

z_6 (*a*) is collinear with z_5

y_6 (*s*) is in the direction the gripper closes

x_6 (*n*) is chosen with a right-handed convention

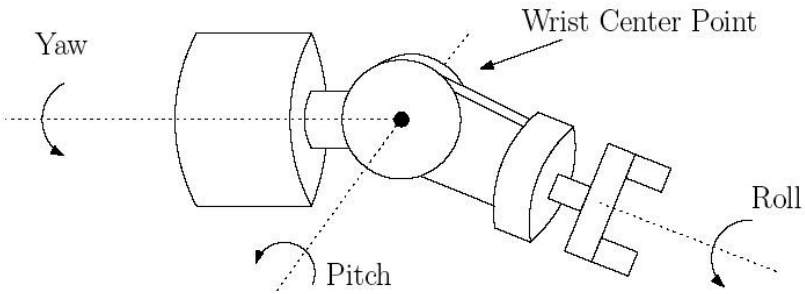

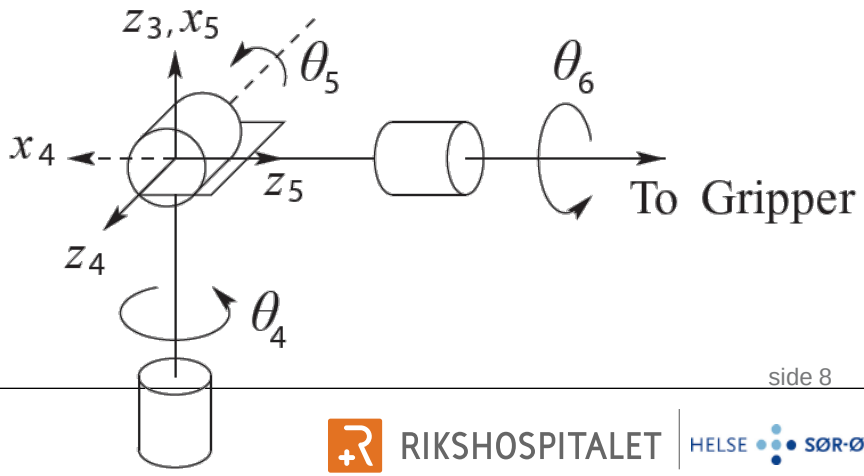

Example 3: spherical wrist

Now define DH parameters

First, define the constant parameters a_i, α_i

Second, define the variable parameters θ_i, d_i

link	a_i	α_i	d_i	θ_i
4	0	-90	0	θ_4
5	0	90	0	θ_5
6	0	0	d_6	θ_6

$$A_4 = \begin{bmatrix} c_4 & 0 & -s_4 & 0 \\ s_4 & 0 & c_4 & 0 \\ 0 & -1 & 0 & 0 \\ 0 & 0 & 0 & 1 \end{bmatrix}, A_5 = \begin{bmatrix} c_5 & 0 & -s_5 & 0 \\ s_5 & 0 & c_5 & 0 \\ 0 & -1 & 0 & 0 \\ 0 & 0 & 0 & 1 \end{bmatrix}, A_6 = \begin{bmatrix} c_6 & -s_6 & 0 & 0 \\ s_6 & c_6 & 0 & 0 \\ 0 & 0 & 1 & d_6 \\ 0 & 0 & 0 & 1 \end{bmatrix}$$

$$T_6^3 = A_4 A_5 A_6 = \begin{bmatrix} c_4c_5c_6 - s_4s_6 & -c_4c_5s_6 - s_4c_6 & c_4s_5 & c_4s_5d_6 \\ s_4c_5c_6 + c_4s_6 & -s_4c_5s_6 + c_4c_6 & s_4s_5 & s_4s_5d_6 \\ -s_5c_6 & s_5c_6 & c_5 & c_5d_6 \\ 0 & 0 & 0 & 1 \end{bmatrix}$$

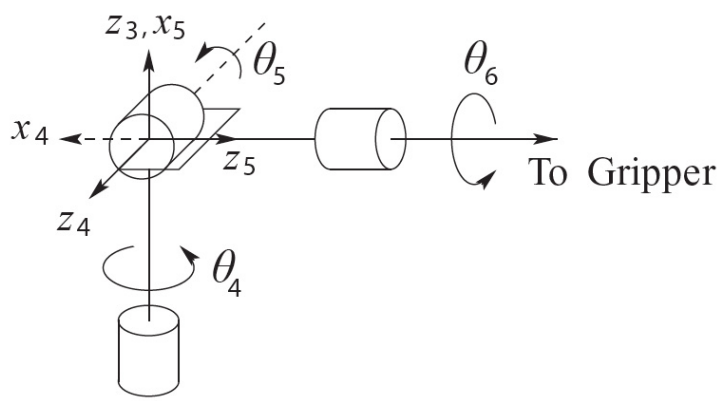

Example 4: cylindrical robot with spherical wrist

6DOF: need to assign seven coordinate frames

But we already did this for the previous two examples, so we can fill in the table of DH parameters:

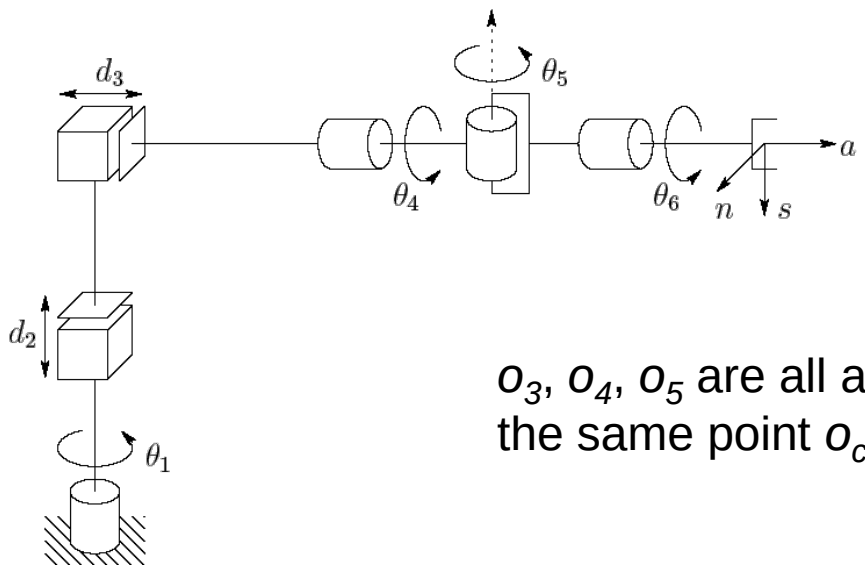

o_3, o_4, o_5 are all at the same point o_c

link	a_i	α_i	d_i	θ_i
1	0	0	d_1	θ_1
2	0	-90	d_2	0
3	0	0	d_3	0
4	0	-90	0	θ_4
5	0	90	0	θ_5
6	0	0	d_6	θ_6

Example 4: cylindrical robot with spherical wrist

Note that z_3 (axis for joint 4) is collinear with z_2 (axis for joint 3), thus we can make the following combination:

$$T_6^0 = T_3^0 T_6^3 = \begin{bmatrix} r_{11} & r_{12} & r_{13} & d_x \\ r_{21} & r_{22} & r_{23} & d_y \\ r_{31} & r_{32} & r_{33} & d_z \\ 0 & 0 & 0 & 1 \end{bmatrix}$$

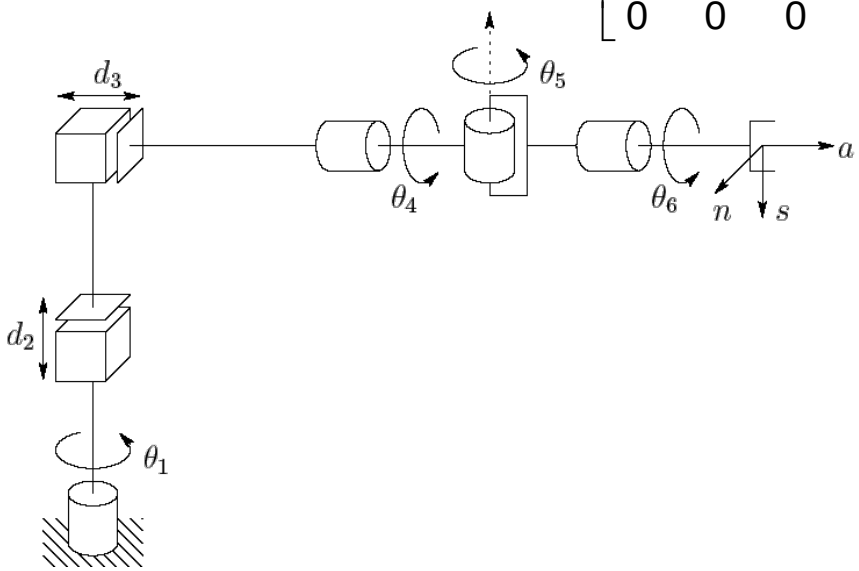

$$\begin{cases} r_{11} = c_1 c_4 c_5 c_6 - c_1 s_4 s_6 + s_1 s_5 c_6 \\ r_{21} = s_1 c_4 c_5 c_6 - s_1 s_4 s_6 - c_1 s_5 c_6 \\ r_{31} = -s_4 c_5 c_6 - c_4 s_6 \\ r_{12} = -c_1 c_4 c_5 s_6 - c_1 s_4 c_6 - s_1 s_5 c_6 \\ r_{22} = -s_1 c_4 c_5 s_6 - s_1 s_4 s_6 + c_1 s_5 c_6 \\ r_{32} = s_4 c_5 c_6 - c_4 c_6 \\ r_{13} = c_1 c_4 s_5 - s_1 c_5 \\ r_{23} = s_1 c_4 s_5 + c_1 c_5 \\ r_{33} = -s_4 s_5 \\ d_x = c_1 c_4 s_5 d_6 - s_1 c_5 d_6 - s_1 d_3 \\ d_y = s_1 c_4 s_5 d_6 + c_1 c_5 d_6 + c_1 d_3 \\ d_z = -s_4 s_5 d_6 + d_1 + d_2 \end{cases}$$

Example 5: the Stanford manipulator

6DOF: need to assign seven coordinate frames:

Choose z_0 axis (axis of rotation for joint 1, base frame)

Choose z_1-z_5 axes (axes of rotation/translation for joints 2-6)

Choose x_i axes

Choose tool frame

Fill in table of DH parameters:

link	a_i	α_i	d_i	θ_i
1	0	-90	0	θ_1
2	0	90	d_2	θ_2
3	0	0	d_3	0
4	0	-90	0	θ_4
5	0	90	0	θ_5
6	0	0	d_6	θ_6

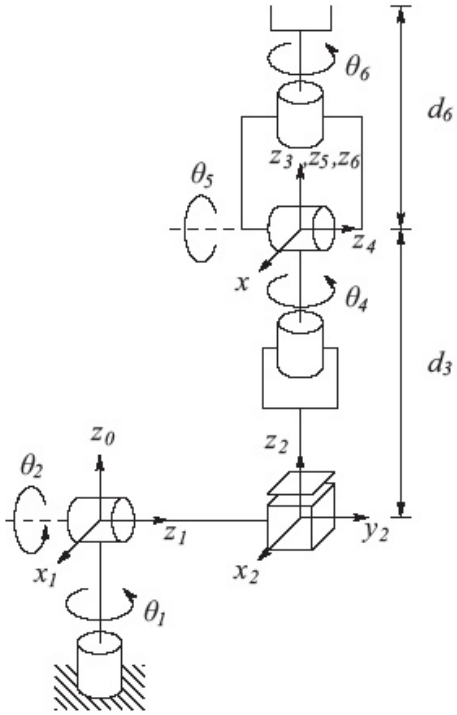

Example 5: the Stanford manipulator

Now determine the individual homogeneous transformations:

$$A_1 = \begin{bmatrix} c_1 & 0 & -s_1 & 0 \\ s_1 & 0 & c_1 & 0 \\ 0 & -1 & 0 & 0 \\ 0 & 0 & 0 & 1 \end{bmatrix}, A_2 = \begin{bmatrix} c_2 & 0 & s_2 & 0 \\ s_2 & 0 & -c_2 & 0 \\ 0 & 1 & 0 & d_2 \\ 0 & 0 & 0 & 1 \end{bmatrix}, A_3 = \begin{bmatrix} 1 & 0 & 0 & 0 \\ 0 & 1 & 0 & 0 \\ 0 & 0 & 1 & d_3 \\ 0 & 0 & 0 & 1 \end{bmatrix}$$

$$A_4 = \begin{bmatrix} c_4 & 0 & -s_4 & 0 \\ s_4 & 0 & c_4 & 0 \\ 0 & -1 & 0 & 0 \\ 0 & 0 & 0 & 1 \end{bmatrix}, A_5 = \begin{bmatrix} c_5 & 0 & s_5 & 0 \\ s_5 & 0 & -c_5 & 0 \\ 0 & -1 & 0 & 0 \\ 0 & 0 & 0 & 1 \end{bmatrix}, A_6 = \begin{bmatrix} c_6 & -s_6 & 0 & 0 \\ s_6 & c_6 & 0 & 0 \\ 0 & 0 & 1 & d_6 \\ 0 & 0 & 0 & 1 \end{bmatrix}$$

Example 5: the Stanford manipulator

Finally, combine to give the complete description of the forward kinematics:

$$T_6^0 = A_1 \cdots A_6 = \begin{bmatrix} r_{11} & r_{12} & r_{13} & d_x \\ r_{21} & r_{22} & r_{23} & d_y \\ r_{31} & r_{32} & r_{33} & d_z \\ 0 & 0 & 0 & 1 \end{bmatrix}$$

$$\begin{cases}
r_{11} = c_1\left[c_2\left(c_4c_5c_6 - s_4s_6\right) - s_2s_5c_6\right] - d_2\left(s_4c_5c_6 + c_4s_6\right) \\
r_{21} = s_1\left[c_2\left(c_4c_5c_6 - s_4s_6\right) - s_2s_5c_6\right] + c_1\left(s_4c_5c_6 + c_4s_6\right) \\
r_{31} = -s_2\left(c_4c_5c_6 - s_4s_6\right) - c_2s_5c_6 \\
r_{12} = c_1\left[-c_2\left(c_4c_5s_6 + s_4c_6\right) + s_2s_5s_6\right] - s_1\left(-s_4c_5s_6 + c_4c_6\right) \\
r_{22} = -s_1\left[-c_2\left(c_4c_5s_6 - s_4c_6\right) - s_2s_5s_6\right] + c_1\left(-s_4c_5s_6 + c_4s_6\right) \\
r_{32} = s_2\left(c_4c_5s_6 + s_4c_6\right) + c_2s_5s_6 \\
r_{13} = c_1\left(c_2c_4s_5 + s_2c_5\right) - s_1s_4s_5 \\
r_{23} = s_1\left(c_2c_4s_5 + s_2c_5\right) + c_1s_4s_5 \\
r_{33} = -s_2c_4s_5 + c_2c_5 \\
d_x = c_1s_2d_3 - s_1d_2 + d_6\left(c_1c_2c_4s_5 + c_1c_5s_2 - s_1s_4s_5\right) \\
d_y = s_1s_2d_3 + c_1d_2 + d_6\left(c_1s_4s_5 + c_2c_4s_1s_5 + c_5s_1s_2\right) \\
d_z = c_2d_3 + d_6\left(c_2c_5 - c_4s_2s_5\right)
\end{cases}$$

Example 6: the SCARA manipulator

4DOF: need to assign five coordinate frames:

Choose z_0 axis (axis of rotation for joint 1, base frame)

Choose z_1-z_3 axes (axes of rotation/translation for joints 2-4)

Choose x_i axes

Choose tool frame

Fill in table of DH parameters:

link	a_i	α_i	d_i	θ_i
1	a_1	0	0	θ_1
2	a_2	180	0	θ_2
3	0	0	d_3	0
4	0	0	d_4	θ_4

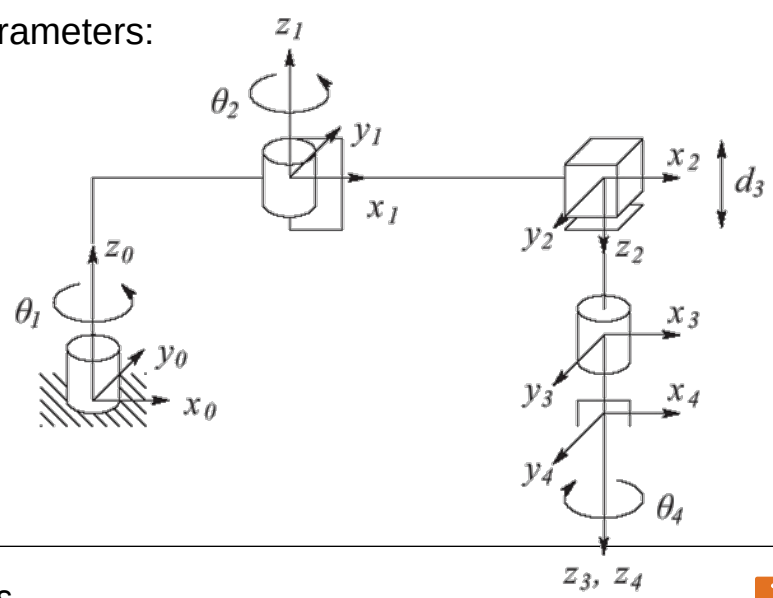

RIKSHOSPITALET HELSE SØR-ØST

Example 6: the SCARA manipulator

Now determine the individual homogeneous transformations:

$$A_1 = \begin{bmatrix} c_1 & -s_1 & 0 & a_1c_1 \\ s_1 & c_1 & 0 & a_1s_1 \\ 0 & 0 & 1 & 0 \\ 0 & 0 & 0 & 1 \end{bmatrix}, A_2 = \begin{bmatrix} c_2 & s_2 & 0 & a_2c_2 \\ s_2 & -c_2 & 0 & a_2s_2 \\ 0 & 0 & -1 & 0 \\ 0 & 0 & 0 & 1 \end{bmatrix}, A_3 = \begin{bmatrix} 1 & 0 & 0 & 0 \\ 0 & 1 & 0 & 0 \\ 0 & 0 & 1 & d_3 \\ 0 & 0 & 0 & 1 \end{bmatrix}, A_4 = \begin{bmatrix} c_4 & -s_4 & 0 & 0 \\ s_4 & c_4 & 0 & 0 \\ 0 & 0 & 1 & d_4 \\ 0 & 0 & 0 & 1 \end{bmatrix}$$

$$T_4^0 = A_1 \cdots A_4 = \begin{bmatrix} c_{12}c_4 + s_{12}s_4 & -c_{12}s_4 + s_{12}c_4 & 0 & a_1c_1 + a_2c_{12} \\ s_{12}c_4 - c_{12}s_4 & -s_{12}s_4 - c_{12}c_4 & 0 & a_1s_1 + a_2s_{12} \\ 0 & 0 & -1 & -d_3 - d_4 \\ 0 & 0 & 0 & 1 \end{bmatrix}$$

Industrial robots

High precision and repetitive tasks

Pick and place, painting, etc

Hazardous environments

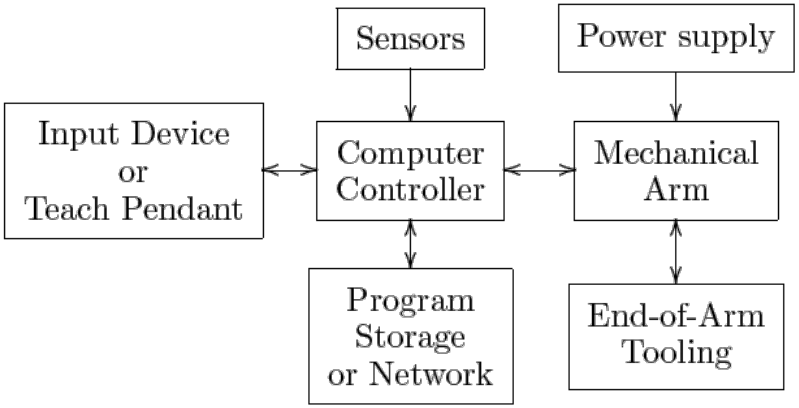

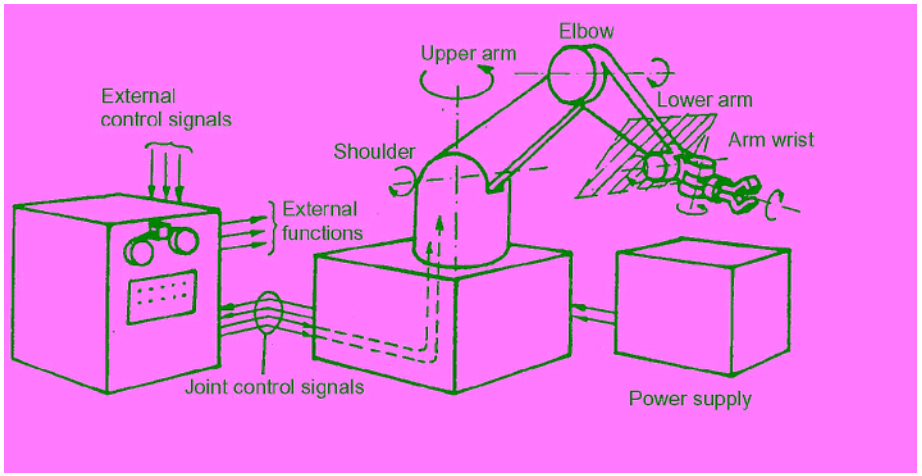

Common configurations: elbow manipulator

Anthropomorphic arm: ABB IRB1400 or KUKA

Very similar to the lab arm NACHI (RRR)

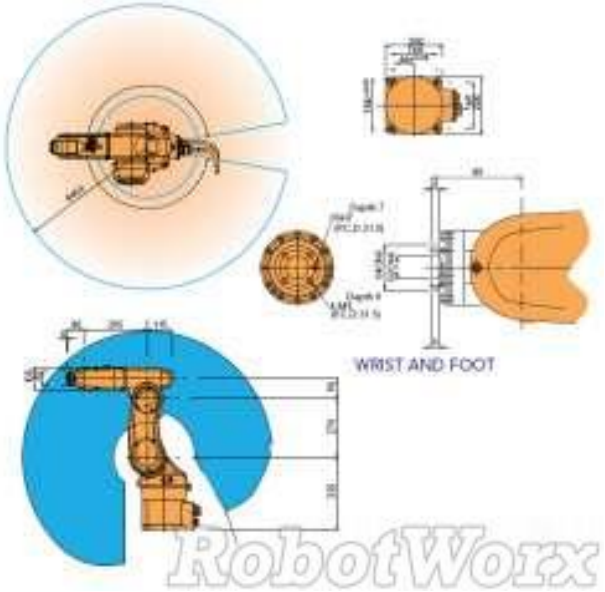

Simple example: control of a 2DOF planar manipulator

Move from ‘home’ position and follow the path AB with a constant contact force *F* all using visual feedback

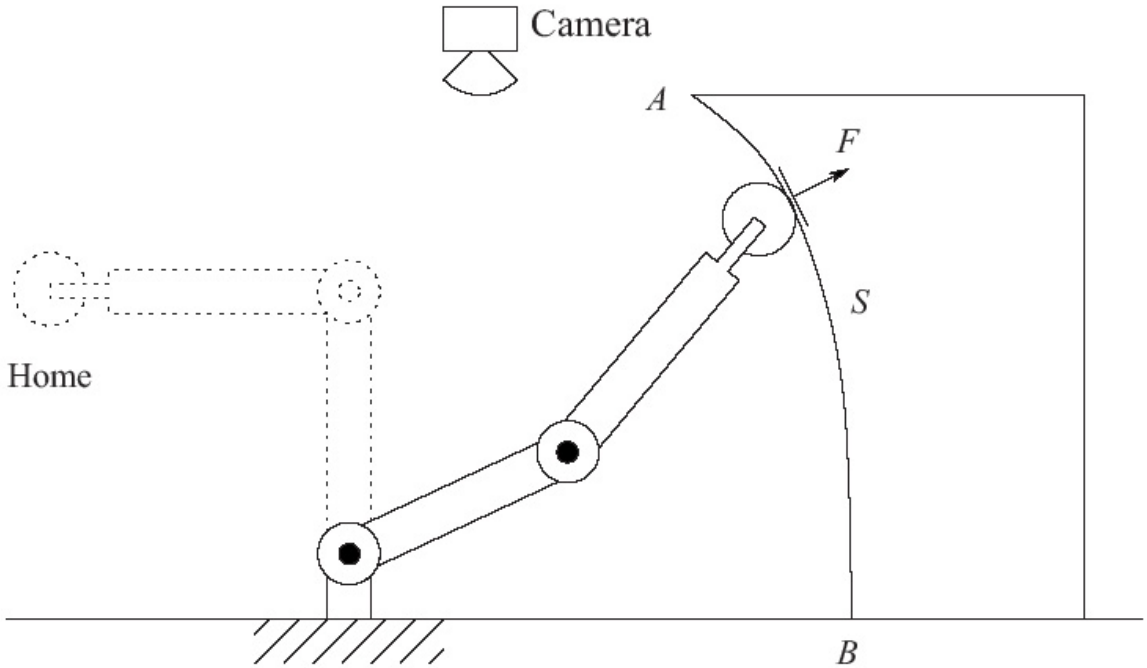

Coordinate frames & forward kinematics

Three coordinate frames: 0 1 2

Positions:

$$\begin{bmatrix} x_1 \\ y_1 \end{bmatrix} = \begin{bmatrix} a_1 \cos(\theta_1) \\ a_1 \sin(\theta_1) \end{bmatrix}$$

$$\begin{bmatrix} x_2 \\ y_2 \end{bmatrix} = \begin{bmatrix} a_1 \cos(\theta_1) + a_2 \cos(\theta_1 + \theta_2) \\ a_1 \sin(\theta_1) + a_2 \sin(\theta_1 + \theta_2) \end{bmatrix} \equiv \begin{bmatrix} x \\ y \end{bmatrix}_t$$

$$\hat{x}_0 = \begin{bmatrix} 1 \\ 0 \end{bmatrix}, \hat{y}_0 = \begin{bmatrix} 0 \\ 1 \end{bmatrix}$$

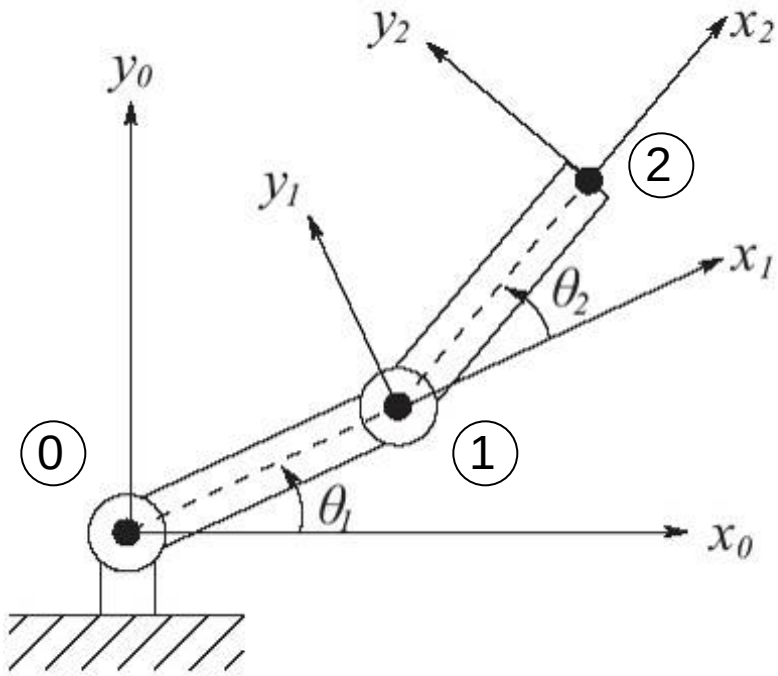

Orientation of the tool frame:

$$\hat{x}_2 = \begin{bmatrix} \cos(\theta_1 + \theta_2) \\ \sin(\theta_1 + \theta_2) \end{bmatrix}, \hat{y}_2 = \begin{bmatrix} -\sin(\theta_1 + \theta_2) \\ \cos(\theta_1 + \theta_2) \end{bmatrix}$$

$$R_2^0 = \begin{bmatrix} \hat{x}_2 \cdot \hat{x}_0 & \hat{y}_2 \cdot \hat{x}_0 \\ \hat{x}_2 \cdot \hat{y}_0 & \hat{y}_2 \cdot \hat{y}_0 \end{bmatrix} = \begin{bmatrix} \cos(\theta_1 + \theta_2) & -\sin(\theta_1 + \theta_2) \\ \sin(\theta_1 + \theta_2) & \cos(\theta_1 + \theta_2) \end{bmatrix}$$

Inverse Kinematics

Find the values of joint parameters that will put the tool frame at a desired position and orientation (within the workspace)

Given *H*:

$$H = \begin{bmatrix} R & o \\ 0 & 1 \end{bmatrix} \in SE(3)$$

Find *all* solutions to:

$$T_n^0(q_1,\ldots,q_n) = H$$

Noting that:

$$T_n^0(q_1,\ldots,q_n) = A_1(q_1)\cdots A_n(q_n)$$

This gives 12 (nontrivial) equations with *n* unknowns

Example: the Stanford manipulator

For a given H:

$$H = \begin{bmatrix} 0 & 1 & 0 & -0.154 \\ 0 & 0 & 1 & 0.763 \\ 1 & 0 & 0 & 0 \\ 0 & 0 & 0 & 1 \end{bmatrix}$$

Find θ_1, θ_2, d_3, θ_4, θ_5, θ_6:

$$\begin{aligned}
c_1[c_2(c_4c_5c_6 - s_4s_6) - s_2s_5c_6] - d_2(s_4c_5c_6 + c_4s_6) &= 0 \\
s_1[c_2(c_4c_5c_6 - s_4s_6) - s_2s_5c_6] + c_1(s_4c_5c_6 + c_4s_6) &= 0 \\
-s_2(c_4c_5c_6 - s_4s_6) - c_2s_5c_6 &= 1 \\
c_1[-c_2(c_4c_5s_6 + s_4c_6) + s_2s_5s_6] - s_1(-s_4c_5s_6 + c_4c_6) &= 1 \\
-s_1[-c_2(c_4c_5s_6 - s_4c_6) - s_2s_5s_6] + c_1(-s_4c_5s_6 + c_4s_6) &= 0 \\
s_2(c_4c_5s_6 + s_4c_6) + c_2s_5s_6 &= 0 \\
c_1(c_2c_4s_5 + s_2c_5) - s_1s_4s_5 &= 0 \\
s_1(c_2c_4s_5 + s_2c_5) + c_1s_4s_5 &= 1 \\
-s_2c_4s_5 + c_2c_5 &= 0 \\
c_1s_2d_3 - s_1d_2 + d_6(c_1c_2c_4s_5 + c_1c_5s_2 - s_1s_4s_5) &= -0.154 \\
s_1s_2d_3 + c_1d_2 + d_6(c_1s_4s_5 + c_2c_4s_1s_5 + c_5s_1s_2) &= 0.763 \\
c_2d_3 + d_6(c_2c_5 - c_4s_2s_5) &= 0
\end{aligned}$$

One solution: $\theta_1 = \pi/2$, $\theta_2 = \pi/2$, $d_3 = 0.5$, $\theta_4 = \pi/2$, $\theta_5 = 0$, $\theta_6 = \pi/2$

Inverse Kinematics

- The previous example shows how difficult it would be to obtain a closed-form solution to the 12 equations
- Instead, we develop systematic methods based upon the manipulator configuration
- For the forward kinematics there is always a unique solution
  - Potentially complex nonlinear functions
- The inverse kinematics may or may not have a solution
  - Solutions may or may not be unique
  - Solutions may violate joint limits
- Closed-form solutions are ideal!

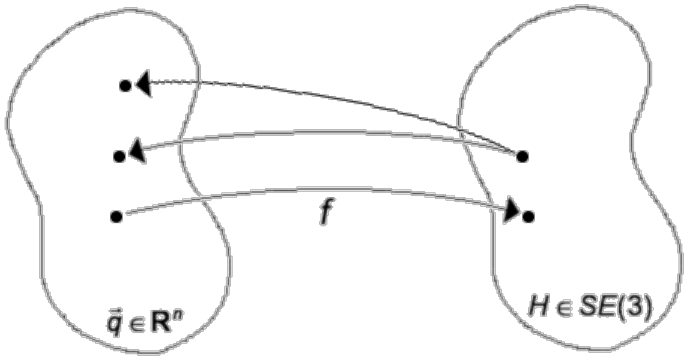

Overview: kinematic decoupling

Appropriate for systems that have an arm a wrist

- Such that the wrist joint axes are aligned at a point

For such systems, we can split the inverse kinematics problem into two parts:

- Inverse position kinematics: position of the wrist center
- Inverse orientation kinematics: orientation of the wrist

First, assume 6DOF, the last three intersecting at o_c

$$R_6^0(q_1,\ldots,q_6) = R$$
$$o_6^0(q_1,\ldots,q_6) = o$$

Use the position of the wrist center to determine the first three joint angles…

Overview: kinematic decoupling

Now, origin of tool frame, o_6, is a distance d_6 translated along z_5 (since z_5 and z_6 are collinear)

Thus, the third column of R is the direction of z_6 (w/ respect to the base frame) and we can write:

$$o = o_6^0 = o_c^o + d_6 R \begin{bmatrix} 0 \\ 0 \\ 1 \end{bmatrix}$$

Rearranging:

$$o_c^o = o - d_6 R \begin{bmatrix} 0 \\ 0 \\ 1 \end{bmatrix}$$

Calling $o = [o_x\ o_y\ o_z]^T$, $o_c^0 = [x_c\ y_c\ z_c]^T$

$$\begin{bmatrix} x_c \\ y_c \\ z_c \end{bmatrix} = \begin{bmatrix} o_x - d_6 r_{13} \\ o_y - d_6 r_{23} \\ o_z - d_6 r_{33} \end{bmatrix}$$

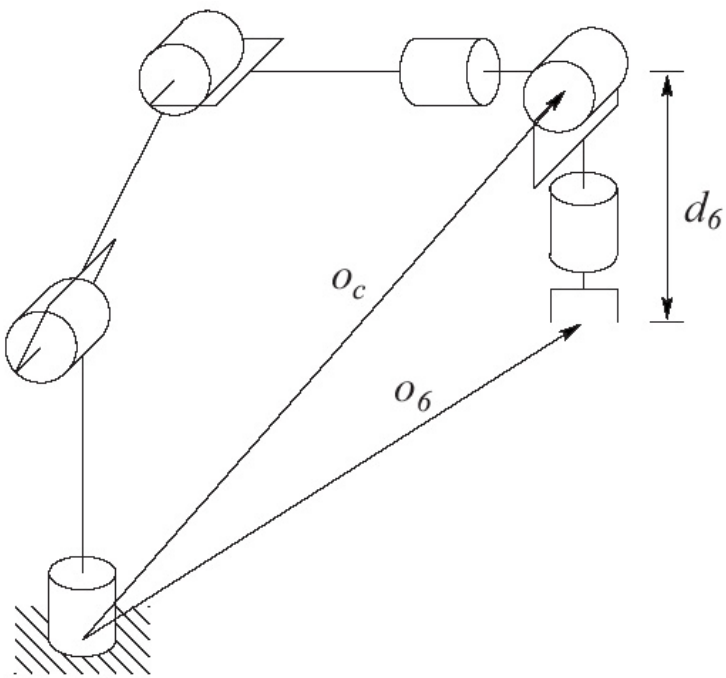

Overview: kinematic decoupling

Since $[x_c\ y_c\ z_c]^T$ are determined from the first three joint angles, our forward kinematics expression now allows us to solve for the first three joint angles decoupled from the final three.

Thus we now have R_3^0

Note that:

$$R = R_3^0 R_6^3$$

To solve for the final three joint angles:

$$R_6^3 = \left(R_3^0\right)^{-1} R = \left(R_3^0\right)^T R$$

Since the last three joints for a spherical wrist, we can use a set of Euler angles to solve for them

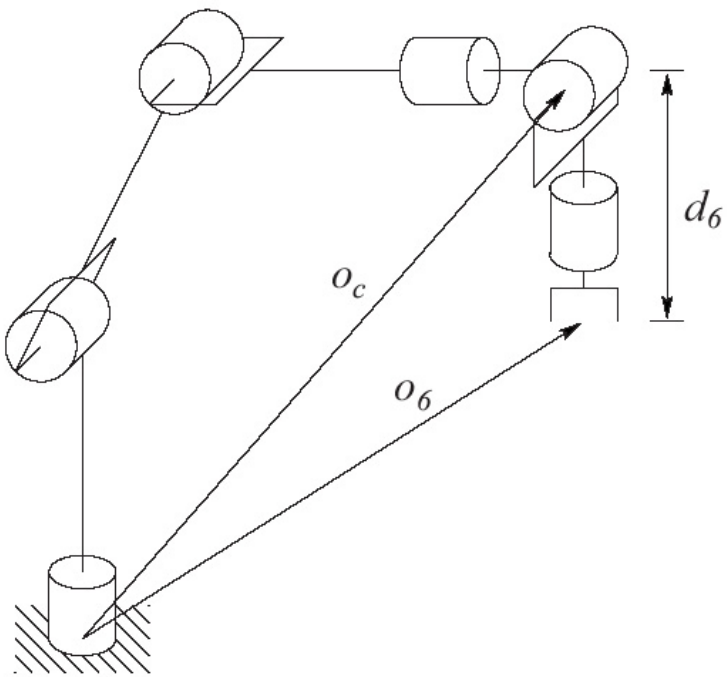

Inverse position

Now that we have $[x_c\ y_c\ z_c]^T$ we need to find q_1, q_2, q_3

- Solve for q_i by projecting onto the x_{i-1}, y_{i-1} plane, solve trig problem
- Two examples: elbow (RRR) and spherical (RRP) manipulators
- For example, for an elbow manipulator, to solve for θ_1, project the arm onto the x_0, y_0 plane

Background: two argument atan

We use atan2(·) instead of atan(·) to account for the full range of angular solutions

Called ‘four-quadrant’ arctan

$$\mathbf{atan2}(y,x) = \begin{cases} -\mathbf{atan2}(-y,x) & y < 0 \\ \pi - \mathbf{atan}\left(-\dfrac{y}{x}\right) & y \geq 0, x < 0 \\ \mathbf{atan}\left(\dfrac{y}{x}\right) & y \geq 0, x \geq 0 \\ \dfrac{\pi}{2} & y > 0, x = 0 \\ \mathbf{undefined} & y = 0, x = 0 \end{cases}$$

Example: RRR manipulator

To solve for θ_1, project the arm onto the x_0, y_0 plane

$$\theta_1 = \mathbf{atan2}(x_c, y_c)$$

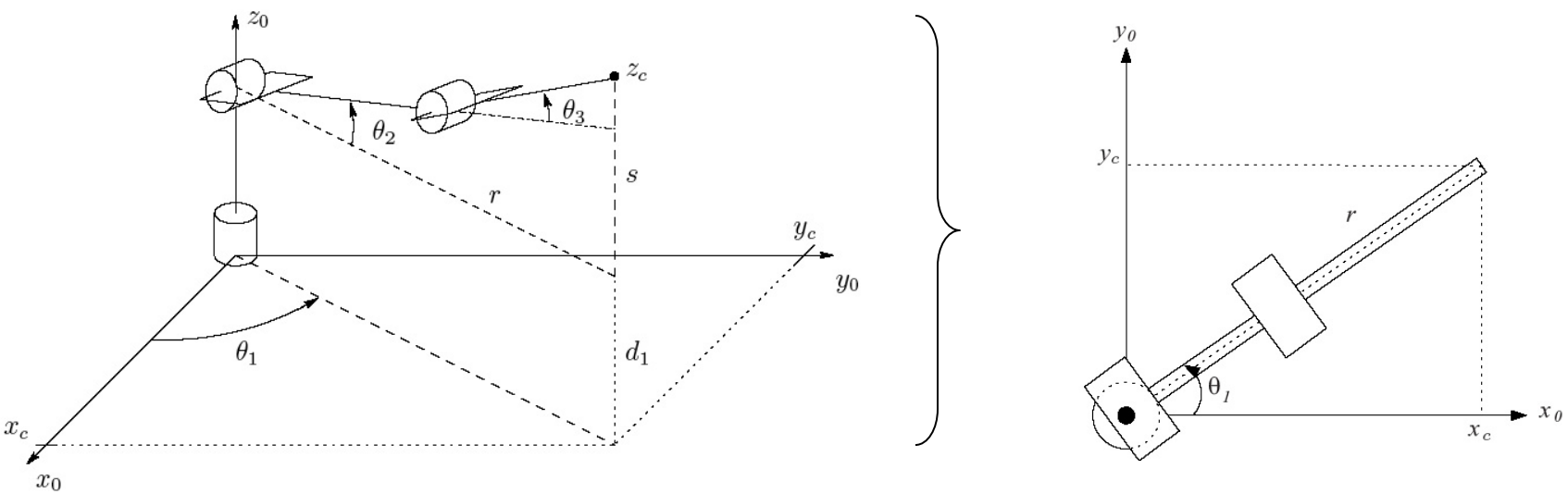

$$\theta_1 = \pi + \mathbf{atan2}(x_c, y_c)$$

Caveats: singular configurations, offsets

If x_c=y_c=0, θ_1 is undefined

i.e. any value of θ_1 will work

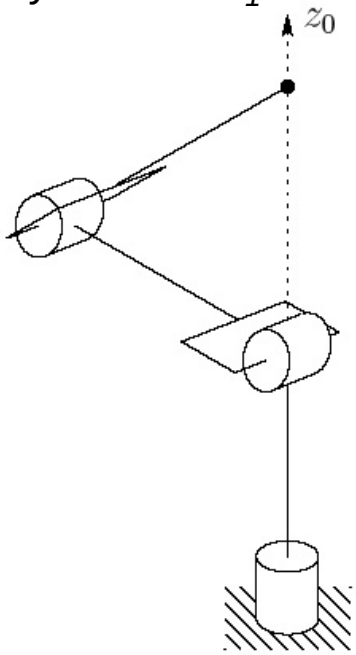

If there is an offset, then we will have two solutions for θ_1: *left arm* and *right arm*

However, wrist centers cannot intersect z_0

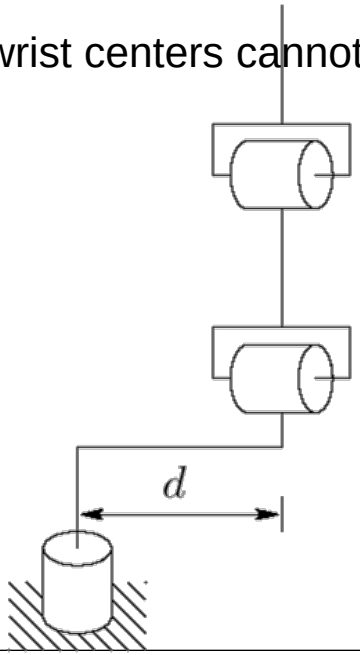

Left arm and right arm solutions

Left arm:

$$\theta_1 = \phi - \alpha$$
$$\phi = \mathbf{atan2}(x_c, y_c)$$
$$\alpha = \mathbf{atan2}\left(\sqrt{x_c^{\,2} + y_c^{\,2} - d^2}, d\right)$$

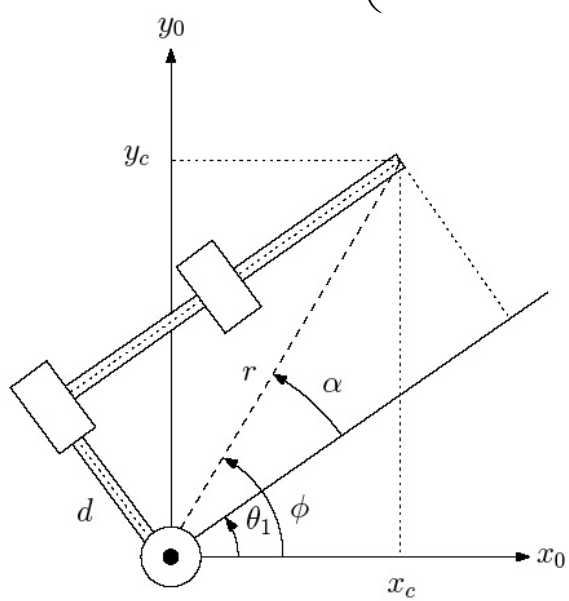

Right arm:

$$\theta_1 = \alpha + \beta$$
$$\alpha = \mathbf{atan2}(x_c, y_c)$$
$$\beta = \pi + \mathbf{atan2}\left(\sqrt{x_c^{\,2} + y_c^{\,2} - d^2}, d\right)$$
$$= \mathbf{atan2}\left(-\sqrt{x_c^{\,2} + y_c^{\,2} - d^2}, -d\right)$$

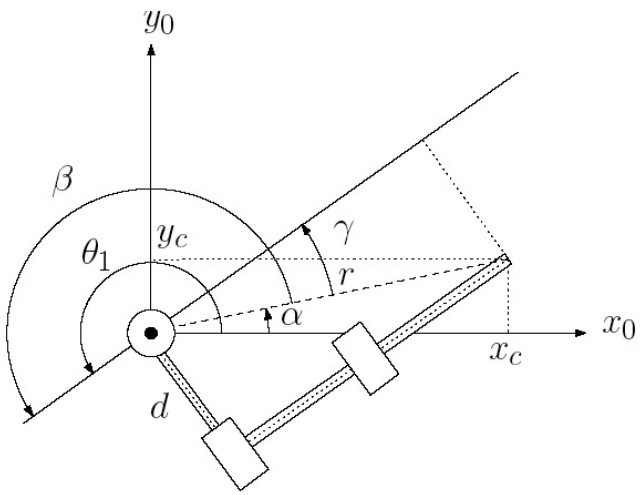

Left arm and right arm solutions

Therefore there are in general two solutions for θ_1

Finding θ_2 and θ_3 is identical to the planar two-link manipulator we have seen previously

$$\cos\theta_3 = \frac{r^2 + s^2 - a_2^{\ 2} - a_3^{\ 2}}{2a_2a_3}$$

$$r^2 = x_c^{\ 2} + y_c^{\ 2} - d^2$$

$$s = z_c - d_1$$

$$\Rightarrow \cos\theta_3 = \frac{x_c^{\ 2} + y_c^{\ 2} - d^2 + (z_c - d_1)^2 - a_2^{\ 2} - a_3^{\ 2}}{2a_2a_3} \equiv D$$

Therefore we can find two solutions for θ_3:

$$\theta_3 = \mathbf{atan2}\left(D, \pm\sqrt{1 - D^2}\right)$$

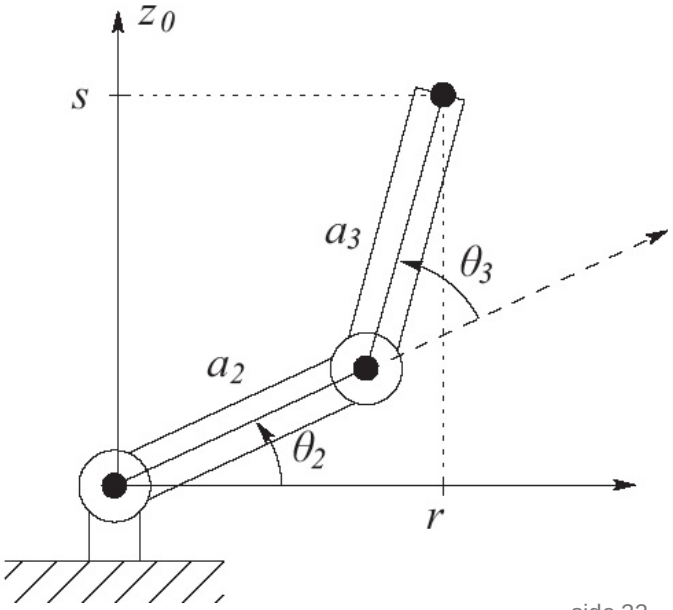

Left arm and right arm solutions

The two solutions for θ_3 correspond to the elbow-down and elbow-up positions respectively

Now solve for θ_2:

$$\theta_2 = \mathbf{atan2}(r,s) - \mathbf{atan2}(a_2 + a_3c_3, a_3s_3)$$
$$= \mathbf{atan2}\left(\sqrt{x_c^{\,2} + y_c^{\,2} - d^2}, z_c - d_1\right) - \mathbf{atan2}(a_2 + a_3c_3, a_3s_3)$$

Thus there are two solutions for the pair (θ_2, θ_3)

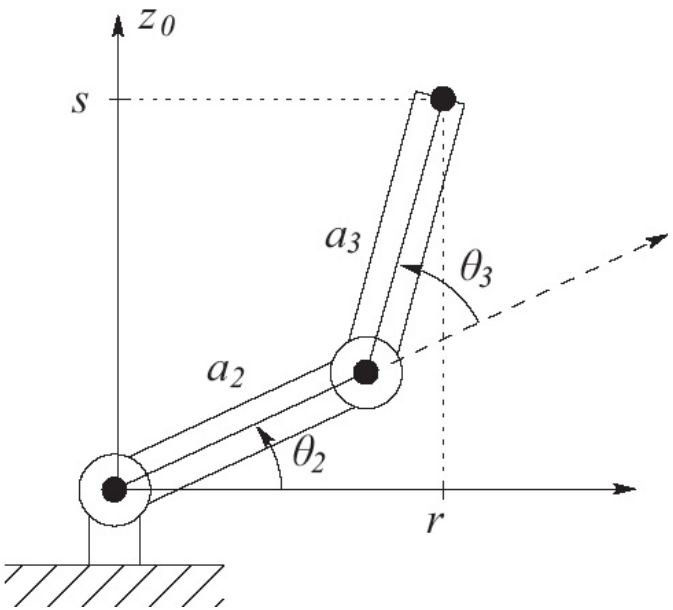

RRR: Four total solutions

In general, there will be a maximum of four solutions to the inverse *position* kinematics of an elbow manipulator

Ex: PUMA

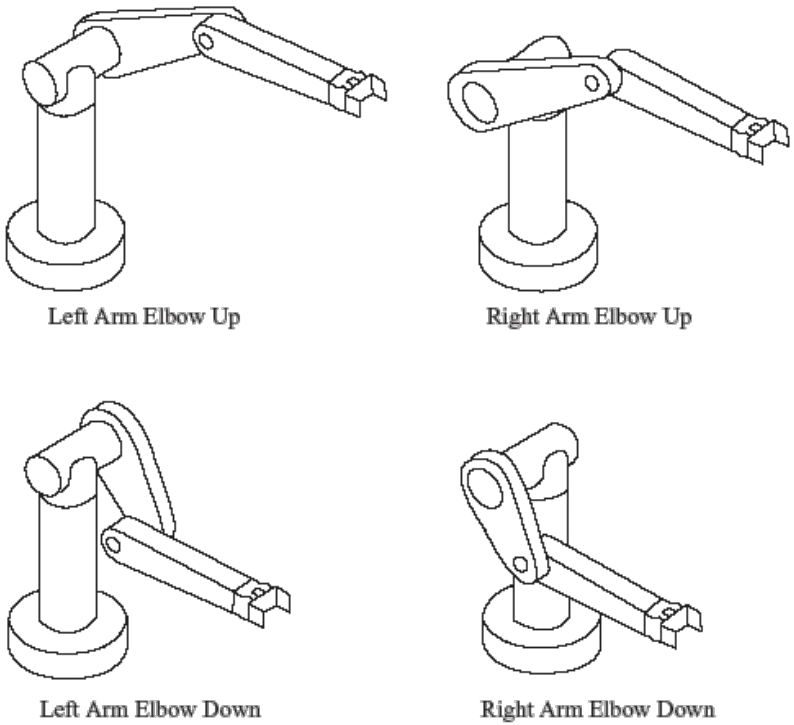

Example: RRP manipulator

Spherical configuration

Solve for θ_1 using same method as with RRR

$$\theta_1 = \mathbf{atan2}(x_c, y_c)$$

Again, if there is an offset, there

will be left-arm and right-arm solutions

Solve for θ_2:

$$\theta_2 = \mathbf{atan2}(s, r)$$

$$r^2 = x_c^{\ 2} + y_c^{\ 2}$$

$$s = z_c - d_1$$

Solve for d_3:

$$d_3 = \sqrt{r^2 + s^2}$$

$$= \sqrt{x_c^{\ 2} + y_c^{\ 2} + (z_c - d_1)^2}$$

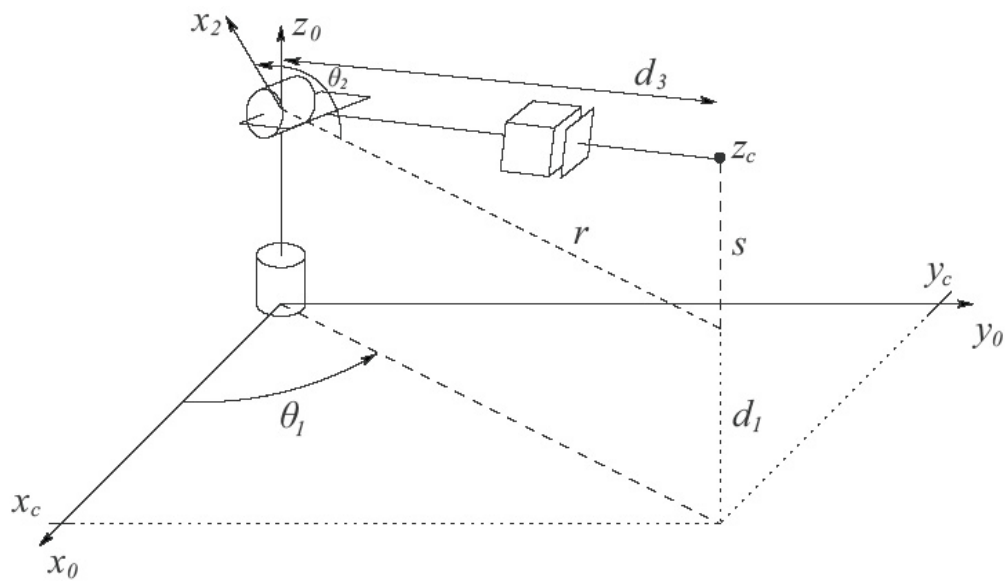

Next class...

Complete the discussion of inverse kinematics

- Inverse orientation
- Introduction to other methods

Introduction to velocity kinematics and the Jacobian