UiO : Department of Informatics
University of Oslo

**IN5230**
**Electronic noise – estimates and countermeasures**

# Lecture no 6 (Mot2)
# General noise model for amplifiers

UiO : Department of Informatics
University of Oslo

When making a noise analysis of large systems, it would be impractical to analyse with detailed noise models for all possible noise sources. A solution is to use simplified models that represent several possible sources.

A popular model is the *En-In-* model that consists of only two parameters: A noise voltage *En* and a noise current *In*.

# The En-In model

In general, the noise in a module can be represented by four sources: two at the input and two at the output. One of the two in each pair is noise voltage while the other is noise current. These noise sources represent all noise so that the remaining part of the module is considered noiseless.

For the case of amplifiers the noise sources at the output can be ignored. Thus all noise can be represented by the two sources (and a complex correlation coefficient) at the input.

The noise voltage *En* and noise current *In* varies with frequency, operating point and the amplifier elements and architecture. In the case of amplifiers it will primarily be the input element (typically a transistor) that has the greatest impact.





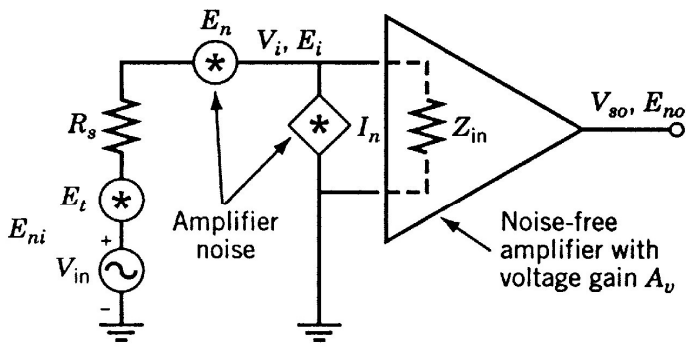


**Figure 2-1** Amplifier noise and signal source.

**Red: Figure**

The model (as shown in the figure) can be used for all types of amplifiers.

(The figure also shows a signal source *Vin*, a noise source *Et* and a source resistance *Rs*. The correlation coefficient is not drawn.)

# Measuring noise at the output or input?

Usually it is on the outputs we measure the signal and also experience the overall noise of the system.
However for several reasons it may be practical under construction to calculate a representative noise value at the input.

- When the preamplifier gain is large, a dominating part of the noise contribution will come from the preamplifier. If noise is calculated towards the input, only a limited number of modules need to be calculated.
- Often it will be interesting to compare with the noise contribution from the source. The effect of reducing the noise significantly below the sensor noise level is small and probably not worth the effort.
- If we calculate towards the input, we can make us independent of the amplifier voltage gain and input impedance.





# Equivalent input noise

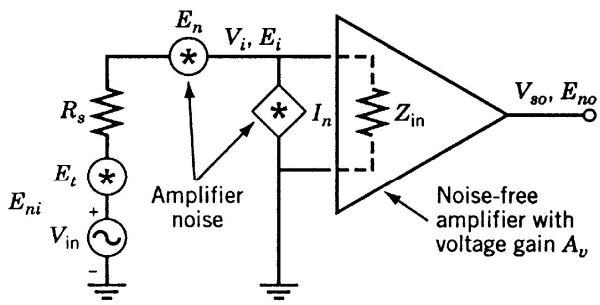


**Figure 2-1** Amplifier noise and signal source.

**Red: Figure**

Method: We will find an equivalent noise *Eni* which could replace all three sources (*Et*, *En*, and *In*) and be placed in series with *Vin*. We will then easily be able to calculate the *S/N* ratio.
Procedure:
1. First, we find the system voltage gain
2. Then we find the noise at the output
3. At last we divide the output noise on the system voltage gain and get an equivalent (theoretical) noise at the input.

# System voltage gain

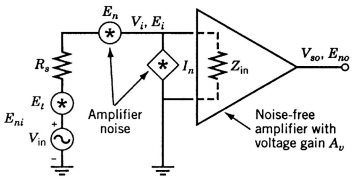


**Figure 2-1** Amplifier noise and signal source.

Yellow: Equation

$$K_t = V_{SO} / V_{in}$$

$K_t$: system voltage gain, $V_{SO}$: Signal output voltage, $V_{in}$: Source signal voltage (not the input of the amplifier!)

Yellow: Equation

$$V_{SO} = \left| \frac{A_v V_{in} Z_{in}}{R_S + Z_{in}} \right|$$

$A_v$: Amplifier voltage gain,
(Signal voltage at amplifier input is: $V_{in}\, Z_{in} / (R_s + Z_{in})$.)

Then we insert the last expression into the second last and get:

Yellow: Equation

$$K_t = \left| \frac{A_v Z_{in}}{R_S + Z_{in}} \right|$$





# Noise on the output

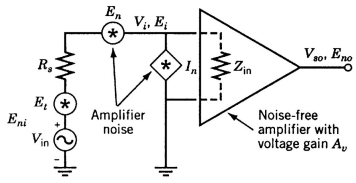


**Figure 2-1** Amplifier noise and signal source.

(Use rms calculation).

$$E_{no}^2 = A_v^2 E_i^2$$

Yellow: Equation

$E_{no}$: Noise on the output, $E_i$: Noise at the input of the amplifier.

$$E_i^2 = \left(E_t^2 + E_n^2\right) \left| \frac{Z_{in}}{Z_{in} + R_S} \right|^2 + I_n^2 \left|Z_{in}\right| \left|R_s\right|^2$$

Yellow: Equation

Noise at the amplifier input is here expressed by the three noise sources. NB: The last square is the square of $Z_{in}$ and $R_s$ in parallel. We put the last expression into the second last and have:

$$E_{no}^2 = \left(E_n^2 + E_t^2\right) \left|A_v\right|^2 \left| \frac{Z_{in}}{Z_{in} + R_s} \right|^2 + I_n^2 \left|A_v\right|^2 \left|Z_{in} \parallel R_s\right|^2$$

Yellow: Equation

# Equivalent input noise

Based on the expressions for *Eno* and *Kt* we find *Eni*:

$$E_{ni}^2 = \frac{E_{no}^2}{K_t^2} = E_t^2 + E_n^2 + I_n^2 R_s^2$$

**Red: Equation**

*This is an important expression!*
$E_{ni}$ is placed (in series) with $V_{in}$.
$E_{ni}$ replace all the noise sources.
The expression is independent of *Av* and $Z_{in}$!

But the amplifier $I_n$ and $E_n$ is maybe not completely independent of each other. If they have a certain correlation we have to extend the expression so that we get:

$$E_{ni}^2 = E_t^2 + E_n^2 + I_n^2 R_s^2 + 2CE_n I_n R_s$$





# Measurement of In and En

Another reason for the popularity of the $I_n$ and $E_n$ model is that it is easy to find the sizes by measurement:

$$E_{ni}^2 = \frac{E_{no}^2}{K_t^2} = E_t^2 + E_n^2 + I_n^2 R_s^2$$

- $E_t$: Is found by calculation:

$$E_t = \sqrt{4kTR_S\Delta f}$$

- $E_n$: Is found by letting $R_s$ go toward zero. (The effect of $I_n$ will go to zero.)
- $I_n$: Is found at the end by letting $R_s$ go towards infinity.

# Examples of input noise:

NB! $E_S$ in the figure is what we have called $E_t$ in the foregoing text.

(Note: The curves are frequency dependent.)

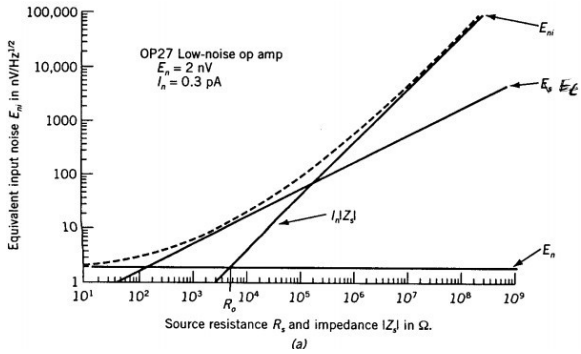


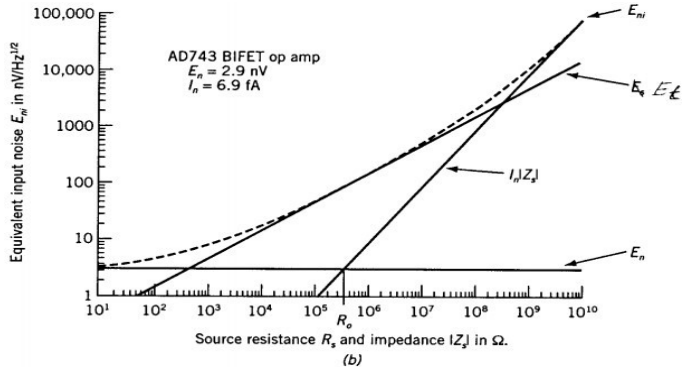






# Other input-output combinations are also possible

| Input (S,N) | Output (S,N) | Signal gain (So/Si) |
|---|---|---|
| $V_{si}, E_{ni}$ | $V_{so}, E_{no}$ | $K = V_{so}/V_{si}$ |
| $V_{si}, E_{ni}$ | $I_{so}, I_{no}$ | $K = I_{so}/V_{si}$ |
| $I_{si}, I_{ni}$ | $V_{so}, E_{no}$ | $K = V_{so}/I_{si}$ |
| $I_{si}, I_{ni}$ | $I_{so}, I_{no}$ | $K = I_{so}/I_{si}$ |
| $Q_{si}, Q_{ni}$ | $V_{so}, E_{no}$ | $K = V_{so}/Q_{si}$ |
| $Q_{si}, Q_{ni}$ | $I_{so}, I_{no}$ | $K = I_{so}/Q_{si}$ |

# Noise factor, noise figure (NF) and signal-to-noise ratio (SNR)

IEEE standards:

*The noise factor of a two-port device is the ratio of the available output noise power per unit bandwidth to the portion of that noise caused by the actual source connected to the input terminals of the device, measured at the standard temperature of 290° K.*

Or:

$$F = \frac{S_i/N_i}{S_o/N_o} = \frac{N_o/S_o}{N_i/S_i} = \frac{N_o/N_i}{S_o/S_i}$$

**Red: Equation**

*F* is the noise factor.

If the item does not contribute with any noise we will have:

$$N_o/N_i = S_o/S_i = A$$

I.e. the relationship between the noise on the output and input will be equal to the relationship between the signal on the output and input. Here *A* is the gain of the element. When this is the case *F* will be equal 1. If the element is contributing noise, *F* will be larger than *1*.





# Noise Figure

The noise factor can be expressed in decibel, and is known as noise figure (NF).

$$NF = 10\log F$$

When the noise contribution is minimum (i.e. 0) then *F=1* and *NF=0dB*.

Example:

For the noise model we analysed earlier we can set up the noise figure as follows:

$$NF = 10\log\frac{E_{ni}^2}{E_t^2} = 10\log\frac{E_t^2 + E_n^2 + I_n^2 R_s^2}{E_t^2}$$

What have we done here? In the numerator, we have the noise at the output calculated back to the input i.e. noise on the output divided by the system gain. The system gain is *So/Si*. I.e. the numerator consists of *No/(So/Si)* while the denominator consists of *Ni*.

(Note that we have 10 in front of the log function i.e. effect: $P=V^2/R$. The voltage is a square which is OK. But what about the resistance? In order to eliminate the resistance it must be the same resistance in the expression for the numerator as for the denominator.)

The noise figure is the relation between the dotted curve and the input noise voltage *Et*. The ratio will be largest for small Rs, almost 1 in the middle, and something in between for large *Rs*.
The noise figure is almost 1 when *En* = *In*·*Rs* i.e. this is where the noise from the electronics are smallest relative to the sensor noise.

But it is also worth noting that the minimum total noise is achieved with minimum input resistance. However other requirements puts a limitation on the ability to utilize this.

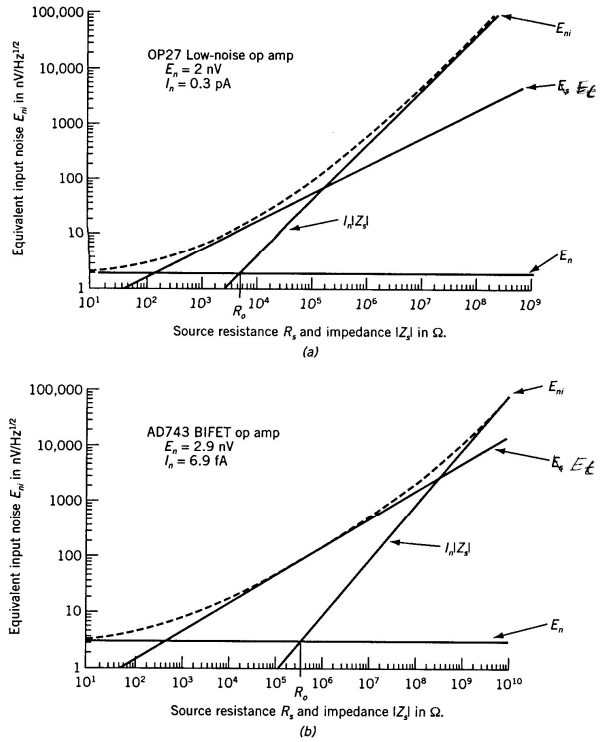


**Figure 2-2** Plots of $E_{ni}$ versus $R_s$.





The definition of NF as stated above is based on a temperature of 290ºK≈17ºC. When this definition is used for sensors that are cooled down you can get negative values for NF.

"Spot Noise Factor" is the noise factor as a function of frequency. In general it indicates the noise in a bandwidth of 1Hz. *F(f)* is used for the noise factor as a function of frequency (with a bandwidth of 1Hz). *Fo* is often used for a 1Hz frequency bandwidth around 1000Hz.

Noise factor is primarily useful for comparing amplifiers. For the optimization for minimum noise it can be directly misleading. For instance an increase of *Rs* can give a smaller noise factor while in reality both the contribution from the amplifier and the source increases. To minimize noise is *Eni* and *So/No* better suited as indicators.

# Optimum source resistance

When the curve for the equivalent input noise is closest to the curve for the thermal noise the noise figure is at its smallest, and the relative contribution from the electronics at the minimum. The resistance at this point is named *Ropt* or *Ro*.

$$R_o = E_n / I_n$$

The noise factor at this resistance is entitled Fopt. It can be expressed as:

$$F_{opt} = 1 + \left(E_n I_n / 2kT\Delta f\right)$$

It is not only important how low noise figures that can be achieved but also how the noise figure changes with variations in *Rs*.

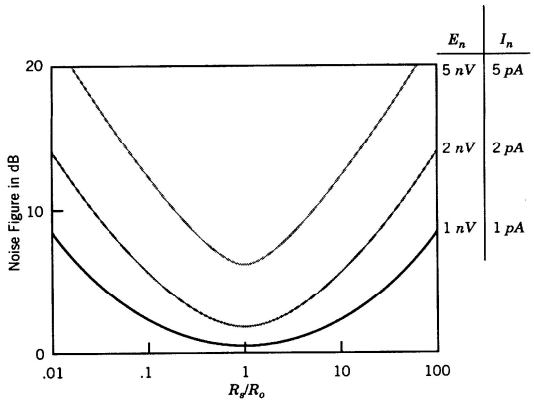


**Figure 2-3** Noise figure versus source resistance.





# Noise resistance and noise temperature

Sometimes someone talks about a theoretical noise resistance that represents all the noise in a module. The size of the noise is modelled either by the

- ”resistance value” or the
- ”resistance temperature”.

Calculation of resistance: $4kTR_n\Delta f = E_n^2 + I_n^2 R_s^2$

Resulting in: $R_n = \left(E_n^2 + I_n^2 R_s^2\right) / 4kT\Delta f$

Calculation of temperature: $4kT_s R_s \Delta f = E_n^2 + I_n^2 R_s^2$

Resulting in: $T_s = \left(E_n^2 + I_n^2 R_s^2\right) / 4kR_s\,\Delta f$

This is rather artificial models, and the resistance temperature may have little relation to the real temperature.

# Noise in cascaded networks

We will in the following look at the importance of the noise contribution from the different parts of a cascaded network. To do so we share the system into modules and identify the contribution of the different modules.

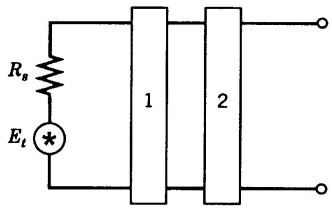


**Figure 2-4** Cascaded networks.

**Repeated from (Eq. 1-5) source noise:**

$$N_t = kT\Delta f$$

**Red: Equation**

$$N_t = \frac{E_0^2}{R_L} = \frac{(E_t/2)^2}{R_L} = \frac{E_t^2}{4R_S} = kT\Delta f$$

**Repeated from noise factor:**

$$F = \frac{N_o/S_o}{N_i/S_i} = \frac{N_o/(S_i G)}{N_i/S_i} = \frac{N_o}{GkT\Delta f}$$

$$\Rightarrow N_o = FGkT\Delta f$$





**Output of stage 1:**

$$N_{i2} = N_{o1} = F_1 G_1 kT\Delta f$$

The expression above is both the source noise and the contribution from the first stage:

**Output from a general stage (j≠1):**

$$F_j = N'_{oj} \big/ G_j\, kT\Delta f$$

Here is *kTΔf* the noise in a hypothetical input resistance for stage *j*. The noise *N'oj* is the noise on the output from the hypothetical input noise and added the contribution from stage j.

The contribution from step *j* can be calculated as follows:

$$N'_{oj} - G_j kT\Delta f = F_j G_j kT\Delta f - G_j kT\Delta f = (F_j - 1) G_j kT\Delta f$$

The subtractor is the hypothetical input noise as it would have appeared alone at the output.

**Output stage 2:**
We set up an expression for the total noise level at the output of stage 2:

$$N_{o_Total} = G_2\left(F_1 G_1 kT\Delta f\right) + \left(F_2 - 1\right)G_2 kT\Delta f = \left(G_2 G_1 F_1 + G_2 F_2 - G_2\right)kT\Delta f$$

The first term is the noise from stage 1 and the noise source while the second term is the noise contribution from stage 2. We can also set up an expression for both stages:

$$F_{12} = \frac{N_{O_Total}}{G_1 G_2 kT\Delta f} = \frac{\left(F_1 G_2 G_1 + F_2 G_2 - G_2\right)kT\Delta f}{G_2 G_1 kT\Delta f} = F_1 + \frac{\left(F_2 - 1\right)}{G_1}$$

Here, we step by step put into the denominator the expression for total noise as we found it over.





**Output Step 3:**

$$N_{O_Total} = G_3 G_2\left(F_1 G_1 kT\Delta f\right) + G_3\left(F_2 - 1\right)G_2 kT\Delta f + \left(F_3 - 1\right)G_3 kT\Delta f$$
$$= \left(G_3 G_2 G_1 F_1 + G_3 G_2 F_2 - G_3 G_2 + G_3 F_3 - G_3\right)kT\Delta f$$

We insert the expression for the total noise in the following expression to the left and get the result on the right:

$$F_{123} = \frac{N_{O_Total}}{G_3 G_2 G_1 kT\Delta f} = F_1 + \frac{\left(F_2 - 1\right)}{G_1} + \frac{\left(F_3 - 1\right)}{G_2 G_1}$$

**General:**

$$F_{1\ldots j} = F_1 + \frac{\left(F_2 - 1\right)}{G_1} + \ldots\ldots + \frac{\left(F_j - 1\right)}{G_1 G_2 \cdots G_{j-1}}$$

**Yellow: Equation**

# Gain chain example

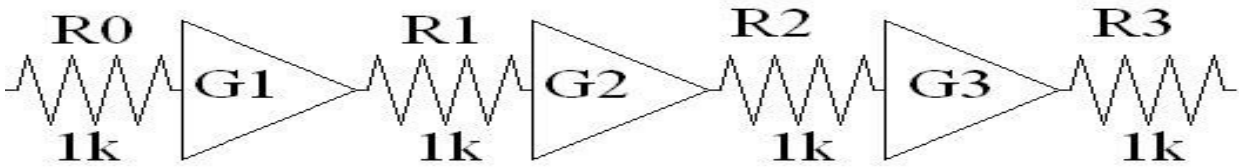


| | R0 | G1 | R1 | G2 | R2 | G3 | R3 |
|---|---|---|---|---|---|---|---|
| O | 4nV/√Hz | 1 | 4nV/√Hz | 1 | 4nV/√Hz | 1 | 4nV/√Hz |
| *I* | *4nV/√Hz* | | *4nV/√Hz* | | *4nV/√Hz* | | *4nV/√Hz* |
| O | 4000nV/√Hz | 10 | 400nV/√Hz | 10 | 40nV/√Hz | 10 | 4nV/√Hz |
| *I* | *4nV/√Hz* | | *0.4nV/√Hz* | | *0.04nV/√Hz* | | *0.004nV/√Hz* |
| O | 400nV/√Hz | 1 | 400nV/√Hz | 10 | 40nV/√Hz | 10 | 4nV/√Hz |
| *I* | *4nV/√Hz* | | *4nV/√Hz* | | *0.4nV/√Hz* | | *0.04nV/√Hz* |
| O | 40nV/√Hz | 0.1 | 400nV/√Hz | 10 | 40nV/√Hz | 10 | 4nV/√Hz |
| *I* | *4nV/√Hz* | | *40nV/√Hz* | | *4nV/√Hz* | | *0.4nV/√Hz* |





# Gain in front

- Main rule:
  - High gain in front!
- Exceptions:
  - If amplification of other signals may saturate the amplifier and prevent the desired signal to get through. In this case a filter may be in front.
  - Active shied. Active shield requires a follower (gain is one).